THIS DRAWING IS UNPUBLISHED. RELEASED FOR PUBLICATION AUGUST ,2006.
© COPYRIGHT 2006 By – ALL RIGHTS RESERVED.

REVISIONS

P	LTR	DESCRIPTION	DATE	DWN	APVD
	D	PER ECO-14-012369	15NOV2014	RZ	MY

NOTES:

1. SINGLE PACKING: ONE CONNECTOR PER LABELED BAG PACKAGED. LABELED PER TEC-107-115
2. TRAY PACKAGED
3. SILVER PLATING
4. NICKEL PLATING
5. THIS ITEM MUST BE WHITE
6. MARKING: 2W-50 OHM

7 ELECTRICAL CHARACTERISTICS

FREQUENCY RANGE:	DC – 1 GHz
NOMINAL IMPEDANCE:	50 Ohm
INSULATION RESISTANCE:	5000 MOhm
WORKING VOLTAGE:	500 Volts RMS at Sea Level
DIELECTRIC WITHSTAND VOLTAGE:	1500 Volts RMS Max
CONTACT RESISTANCE:	
CENTRE CONTACT:	1.50 mOhm Max
OUTER CONTACT:	0.20 mOhm Max
VSWR @ 0.3GHz:	1.7 MAX
INSERTION LOSS 0.5db:	

8 MECHANICAL CHARATERISTICS

COUPLING RETENTION FORCE:	445N
CABLE RETENETION FORCE:	N/A
DURABILITY:	500 Cycles Min

9 ENVIRONMENTAL CHARACTERISTICS

OPERATING TEMPERATURE:	–40°C to +70°C

10 FOR TECHNICAL DATA REFER TO YOUR LOCAL TYCO ELECTRONICS SALES OFFICE

11 ALL DIMENSIONS ARE NOMINAL FOR REFERENCE ONLY UNLESS OTHERWISE STATED

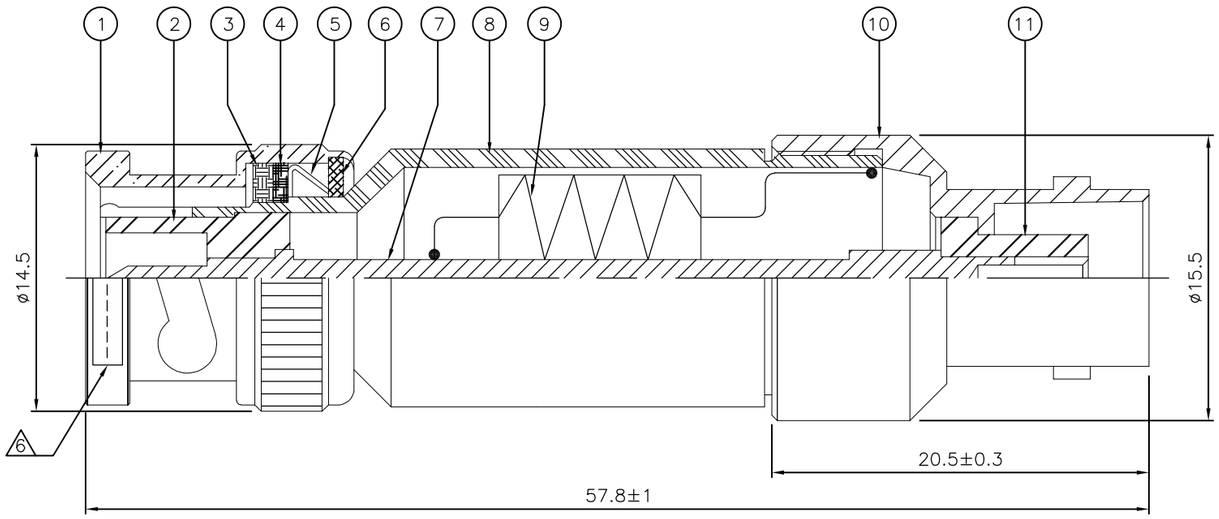

QUANTITY PER ASSY				PARTS LIST		
		1	1	PTFE	INSULATION	11
		1	1	BRASS (3)	BODY 2	10
		1	1	2W-50 OHM	RESISTOR	9
		1	1	BRASS (3)	BODY 1	8
		1	1	BRASS (3)	CONTACT	7
		1	1	BRASS (3)	WASHER	6
		1	1	SPRING STEEL (4)	SPRING	5
		1	1	BRASS (4)	RETAINING RING	4
		1	1	SILICONE RUBBER (5)	GASKET	3
		1	1	PTFE	INSULATION	2
		1	1	BRASS (3)	SHELL	1
		6--0	1--0	MATERIAL	DESCRIPTION	ITEM
		(2)	(1)			

THIS DRAWING IS A CONTROLLED DOCUMENT.

DIMENSIONS: mm

TOLERANCES UNLESS OTHERWISE SPECIFIED:

0 PLC	± –
1 PLC	± 0.2
2 PLC	± –
3 PLC	± –
4 PLC	± –
ANGLES	± –

MATERIAL: SEE TABLE

FINISH: –

DWN	J.SANDWELL	04AUG06
CHK	S.PARLOW	04AUG06
APVD	F.WHEELER-KING	04AUG06
PRODUCT SPEC	—	
APPLICATION SPEC	—	
WEIGHT	—	

CUSTOMER DRAWING

TE Connectivity

NAME: BNC THROUGH TERMINATION P-J 50 OHM

SIZE: A3 | CAGE CODE: 00779 | DRAWING NO: C-1478207 | RESTRICTED TO: —

SCALE: NTS | SHEET 1 OF 1 | REV D