Copyright FCI.

FCIconnect.com

PRODUCT NUMBER	PITCH
VJxx41x000J0G	7.50mm

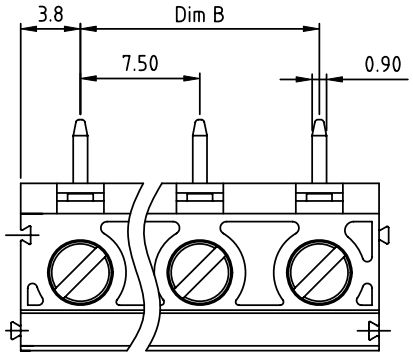

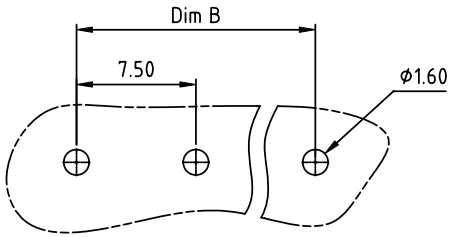

RECOMMENDED P.C.B LAYOUT
TOP VIEW

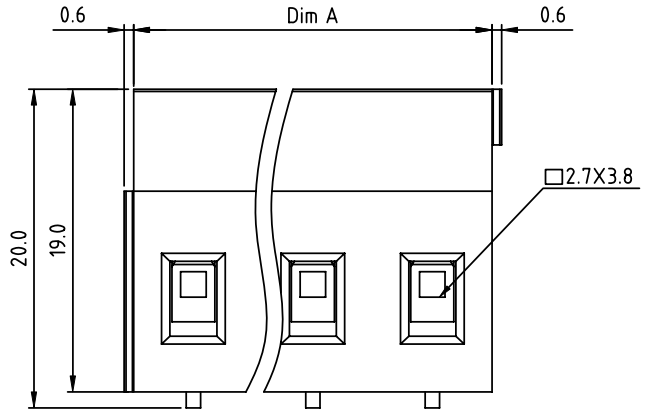

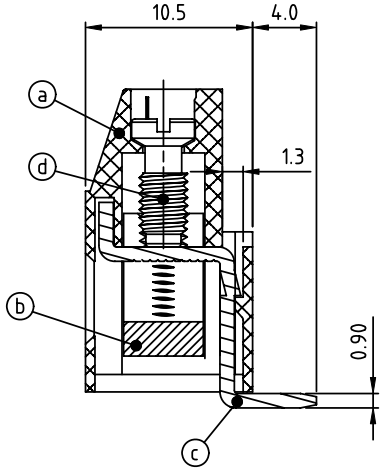

Material:
- Item ⓐ Terminal housing:Thermoplastic (UL 94V-0)
- Item ⓑ Clamp: Brass Ni plated
- Item ⓒ Solder pin:Brass Tin plated
- Item ⓓ Terminal screw: Steel Zinc plating"-"slot type

Electrical cULus / VDE
- Voltage rating : 300VAC / 750V
- Current rating : 20A / 24A
- Wire range : 0.2-2.5mm²
- Solid wire(AWG) : 12-30
- Stranded wire(AWG) : 12-30
- Torque : 3.5 Lb-In / 0.5 N.m
- Screw: M3
- Wire strip length: 6-7mm
- Withstanding Voltage: 1.6KV / 3KV
- Operating temperature: -40°C to +115°C
- Soldering temperature: 260°C±5°C/5 Sec
- Safety Approval: c UL us VDE

Dimension A&B

DIM A	N×7.5
DIM B	(N-1)×7.5

N=Number of poles

Poles	Tolerance
2p-6p	±0.20
7p-12p	±0.30
13p-16p	±0.40

PART NO.: VJ xx 4 1 x 0 00J0 G

End stackable
No. of poles
02 2 poles
03 3 poles
... ...
16 16 poles

Color
0 Black (RAL9005)
2 Red (RAL3001/D)
3 Orange(RAL2011/P)
4 Yellow(RAL1018/A)
5 Green(RAL6018/T)
6 Blue (RAL5015/A)
8 Grey(RAL7035/D)
9 White(RAL1102)
C Green(RAL6018/U)

RoHS compliant (lead<4%) In copper Alloy

mat'l. code				surface ASME Y14.5	tolerance ASME Y14.5	projection
ltr	ecn no	dr	date	tolerances unless otherwise specified		
				angles	linear X.±0.5 / X.X±0.3 / X.XX±0.1	MM
				X°±1°		scale
				dr	EVIN ZHONG 040914	
				engr	EVIN ZHONG 040914	
				chr	HANKE FENG 040914	
				appd	SHI JUN 040914	
sheet index	revision	A				
	sheet	1				

product family	TERMINAL BLOCK
title	TERMINAL BLOCK RISING CLAMP,90D WIRE INLET,END STACKABLE
dwg no	VJxx41x000J0G
sheet 1 of 1	
size	A4
type	CUSTOMER Drawing