RECOMMENDED HOLES PATTERN

RECOMMENDED PC BOARD THICKNESS: 1.6 mm

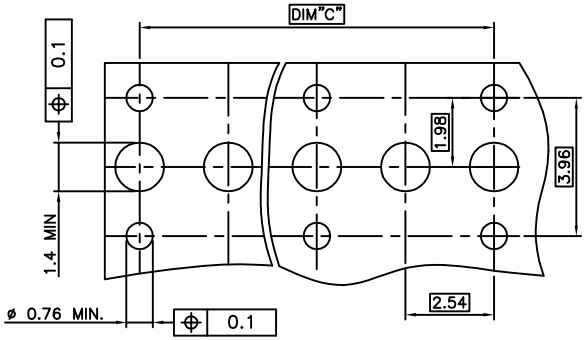

PRODUCT N°	HOUSING	DIM"C"	DIM"D"	NB. OF TER.	CONTACT PLACED IN CAVITY (TABLE ACCORDING VIEW A)																										
					1	2	3	4	5	6	7	8	9	10	11	12	13	14	15	16	17	18	19	20	21	22	23	24	25	26	27	28
95234–Y01LF	1 X 28 pos.	68.58	71.04	14	X		X		X		X		X		X		X		X		X		X		X		X		X		X	
95234–Y02LF	1 X 13 pos.	30.48	32.94	10	X	X	X	X	X				X	X	X	X	X															
95234–Y03LF	1 X 3 pos.	5.08	7.54	2	X		X																									
95234–Y04LF	1 X 7 pos.	15.24	17.70	4	X		X		X		X																					
95234–Y05LF	1 X 4 pos.	7.62	10.08	2	X			X																								
95234–Y06LF	1 X 14 pos.	33.02	35.48	10	X	X			X	X			X	X	X	X	X	X														

RoHS COMPATIBLE,
SEE NOTE 4

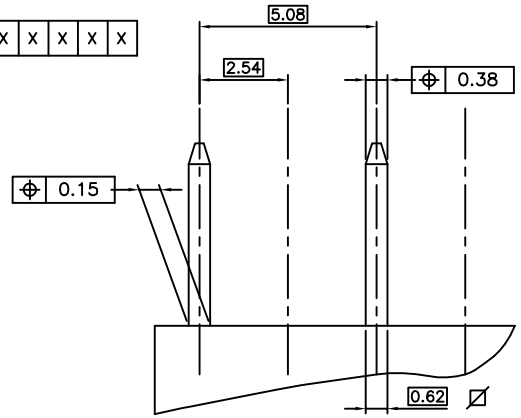

RECOMMENDED PINS PATTERN

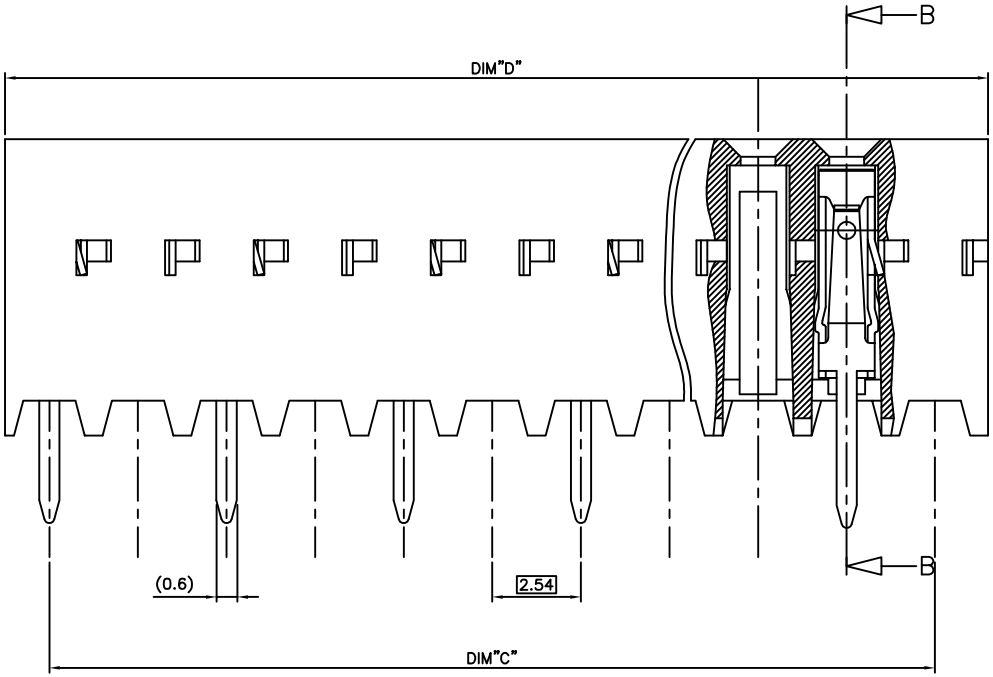

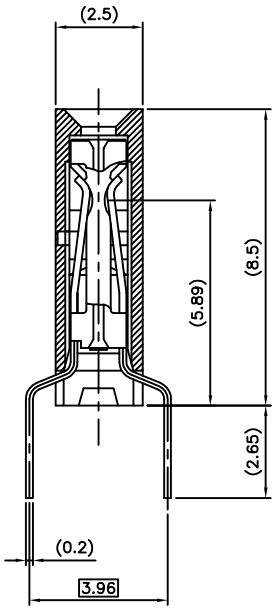

SECTION B–B

NOTES:

1 – MATERIAL HOUSING: THERMOPLASTIC POLYESTER 30% GLASS FILLED, COLOUR BLUE. FLAME RETARDANT PER UL–94 CATEGORY V0.

2 – MATERIAL TERMINAL: PHOSPHOR BRONZE EXTRA HARD.

3 – CONNECTOR TO BE USED ON PC BOARD WITH NON PLATED THROUGH HOLES

4 – RoHS COMPATIBLE PRODUCT SPECIFICATIONS

a – PLATING:

– "LF" MEANS THE PRODUCT IS LEAD–FREE, 2µm MINIMUM MATTE TIN OVER 1.27µm MINIMUM NICKEL UNDERPLATE.

b – MANUFACTURING PROCESS COMPATIBILITY

– THE HOUSING WILL WITHSTAND EXPOSURE TO 260°C ±5°C SOLDER BATH TEMPERATURE FOR 5 SECONDS IN A WAVE SOLDER APPLICATION WITH A 1.6mm MIN THICK CIRCUIT BOARD.

c – LABELING:

– MEETS PACKAGING SPECS AS PER GS–14–920

d – LEGAL STATEMENT: SEE GS–47–0004

95234–4XXLF	5 µm Sn	Sn
95234–3XXLF	0.76 µm GOLD	Sn
PLATING CODE	CONTACT AREA	SOLDER TAIL
	PLATING THICKNESS OVER 1.27µm Ni	

mat'l. code: SEE NOTES				surface: ISO 1302	tolerance: ISO 406 ISO 1101	projection
Ltr	ecn no	dr	date	tolerances unless otherwise specified		
H	F07–0271	LMU	07.12.06	angles ±2°	linear ±0.3	mm
J	B–16001	LMU	13.10.04			
K	B–18504	LMU	14.09.08			scale 10:1
L	B–19123	LMU	14.1021	dr D.LEGRAND	95.11.17	
				engr P.NIZZI	95.11.17	
F	F04–0347	DLE	04.11.15	chr D.LEGRAND	95.11.17	
G	F06–0204	DLE	06.06.28	appd PNZ	95.11.17	
sheet index	revision sheet					

product family: DX VCC SR

title: DUAL ENTRY S.L OFF SET LEGS

dwg no: 95234 sheet 1 of 1 size A2

type: CUSTOMER Drawing

form: A2

Copyright FCI
FCIconnect.com
Printed: Oct 29, 2014
STATUS:Released
PDS: Rev :L