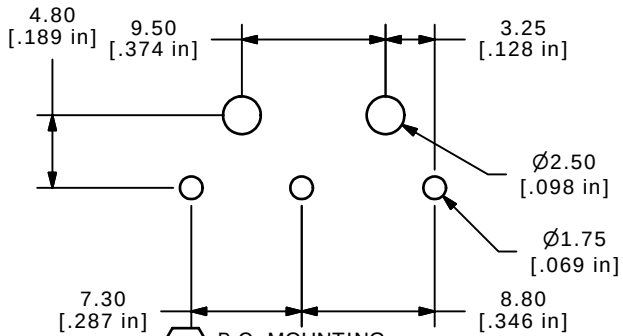

C P.C. MOUNTING

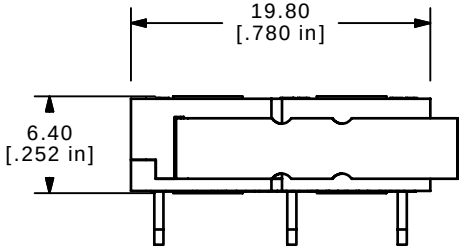

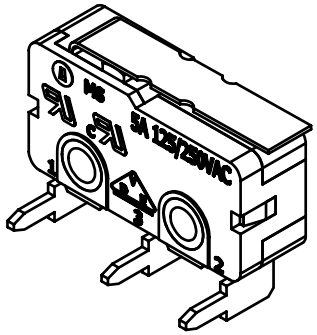

ISOMETRIC

B

O.P. (MM)	P.T. (MM)
9.1 ±0.8	3.8 MAX

O.P. = OPERATING POINT
P.T. = PRE-TRAVEL

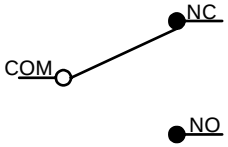

CIRCUIT: SPDT

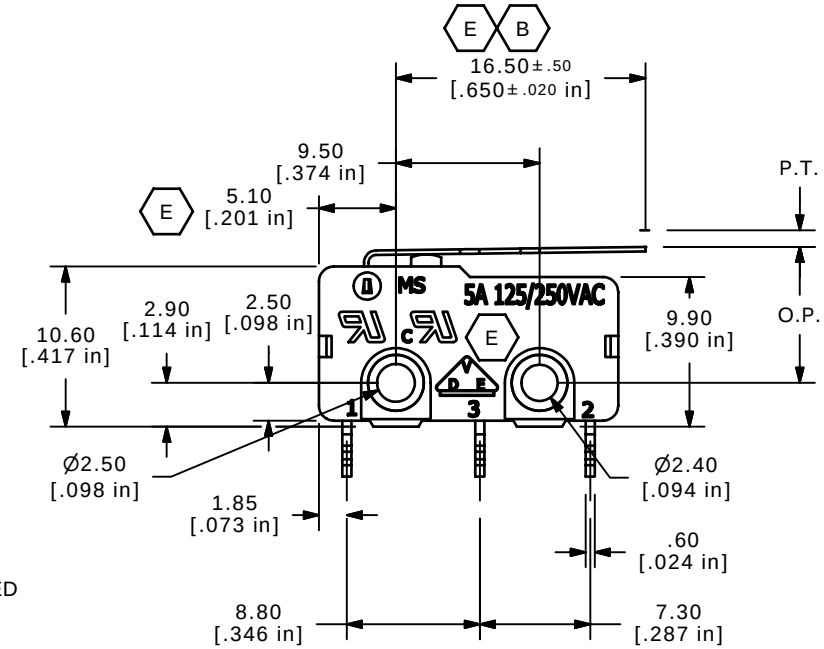

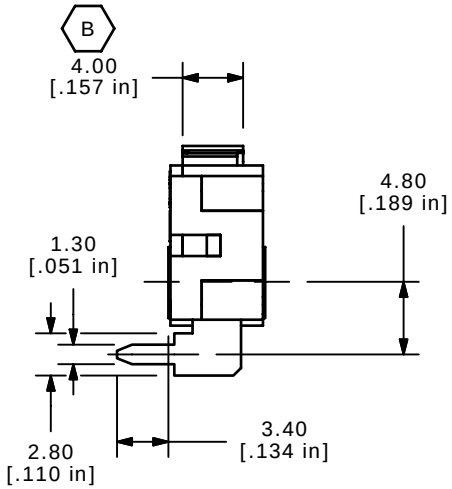

NOTES:
1. ALL DIMENSIONS IN MM [INCH]
2. GENERAL TOLERANCE: X.X=±0.4
   X.XX=±0.25
3. RATING: 5A @125/250VAC UL, CUL, VDE APPROVED
▲4. OPERATING FORCE: 45±20 GRAMS B C
5. OPERATING TEMP: -25˚C TO 85˚C
6. ELECTRICAL LIFE: 50,000 CYCLES MIN. E
7. MECHANICAL LIFE: 1,000,000 CYCLES TYP. E
8. INSULATION RESISTANCE: 100 MEGA-OHMS
9. DIELECTRIC STRENGTH: 1000VAC 1 MINUTE (INITAL VALUE)
10. CONTACT RESISTANCE: 100 MILLI-OHMS MAX.
11. ▲ DENOTES CRITICAL PARAMETER.
12. 2002/95/EC (ROHS) COMPLIANT

REV	PCR NO	DESCRIPTION	DATE	BY
E	15649	CHANGES NOTED	1/3/06	PH
D	15283	EDIT PC MOUNT, ROHS NOTE	9/15/05	PH
C	15047	CHANGED NOTE 4, ADDED MOUNTING	6/30/05	JB
B	14969	CHANGED DIMENSIONS AND NOTES	6/2/05	JB
A	14948	RELEASED FOR PRODUCTION	5/24/05	JB

THE INFORMATION CONTAINED IN THIS DOCUMENT IS PROPRIETARY TO E-SWITCH AND IS NOT TO BE COPIED OR TRANSFERRED

E-SWITCH®

TITLE MS0850502F045V2A

SCALE	DATE	DR	DWG	REV
2:1	5/24/2005	JB	Q970013	E