MODEL NO.	PACKAGING
134-1000-010	ONE PCS PER BAG

REV	ECO	DATE
001	ECO-17-0032	11/28/2017

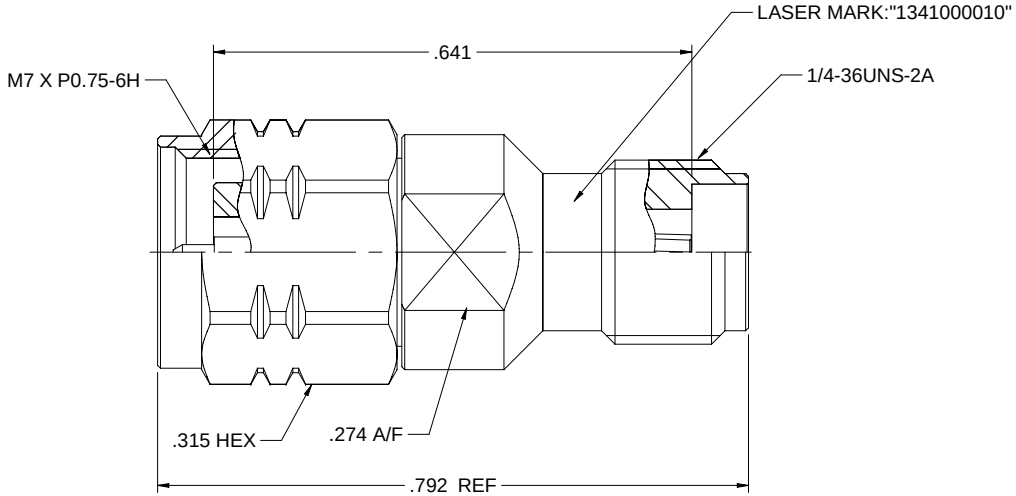

NOTES: UNLESS OTHERWISE SPECIFIED

1. MATERIAL & FINISH:
   1.1 BODY & SHELL: PASSIVATED STAINLESS STEEL
   1.2 CONTACT PIN : GOLD PLATED BERYLLIUM COPPER
   1.3 INSULATOR: ULTEM 1000 AMBER
   1.4 GASKET: SILICONE RED
   1.5 C RING: BERYLLIUM COPPER

2. ELECTRICAL:
   2.1 IMPEDANCE: 50 OHMS
   2.2 FREQUENCY RANGE: 0-46 GHz
   2.3 INSERTION LOSS: 0.3DB MAX
   2.4 DIELECTRIC WITHSTANDING VOLTAGE: 500 VRMS MIN
   2.5 VOLTAGE STANDING WAVE RATIO: DC- 4 GHZ: 1.05 MAX
   4 -20 GHZ: 1.08 MAX
   20-46 GHZ: 1.15 MAX
   2.6 CONTACT RESISTANCE: CENTER CONTACT: 4 MILLIOHMS MAX
   OUTERR CONTACT: 2.5 MILLIOHMS MAX
   2.7 INSULATION RESISTANCE: 5000 MOHM MIN

3. MECHANICAL:
   3.1 ENGAGEMENT FORCE/DISENGAGEMENT FORCE: 0.23NM MAX
   3.2 COUPLING PROOF TORQUE: 1.65 NM MIN (2.4MM)
   3.3 COUPLING NUT RETENTION: 267 N MIN
   3.4 CONTACT RETENTION: 20N MIN
   3.5 DURABILITY (MATING): 500 CYCLES MIN

4. ENVIRONMENT:
   4.1 THERMAL SHOCK: MIL-STD-202, METHOD 107, CONDITION B.
   4.2 OPERATING TEMPERATURE: -55 TO 125°C
   4.3 SALT SPRAY: MIL-STD-202, METHOD 101, CONDITION B
   4.4 SHOCK: MIL-STD-202, METHOD 213, CONDITION I
   4.5 VIBRATION: MIL-STD-202, METHOD 204, CONDITION D
   4.6 MOISTURE RESISTANCE: MIL-STD-202, METHOD 106

cinch	Model No. 134-1000-010		Johnson
	RoHS2 ☑ 2011/65/EU	Cage Code	Title: ADAPTER ASSEMBLY, 2.4mm PLUG TO SMK(2.92mm) JACK
	UNLESS OTHERWISE SPECIFIED: UNITS: INCH	3RD ANGLE PROJECTION	Drawing No. 134-1000-010 / Rev. 001
	.XXX ±.02 .XXXX ±.01 ANGLES ±5°	Drawn by: Betty.Yu	
		Date: 10/27/2017	Size C / DO NOT SCALE DRAWING / Workmanship Std: NONE / Sheet 1 of 1