AIRFRD10

REVISION RECORD				
REV	ECO	DESCRIPTION	DRFT	CHKD

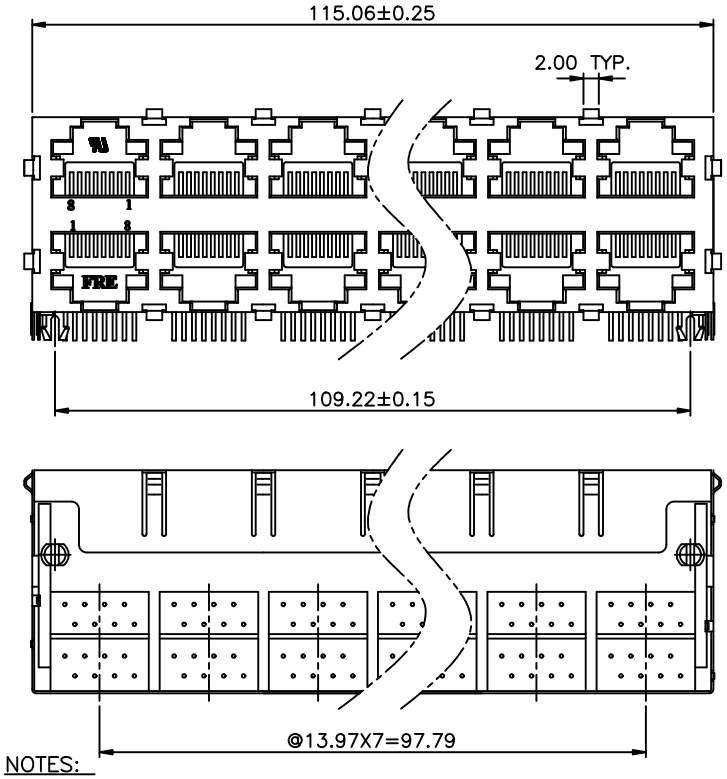

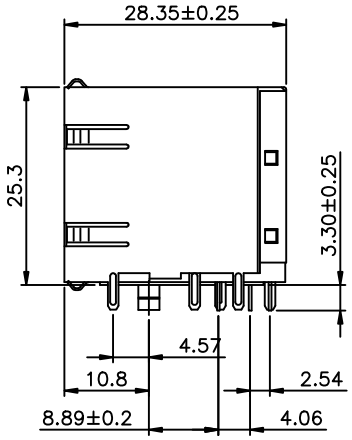

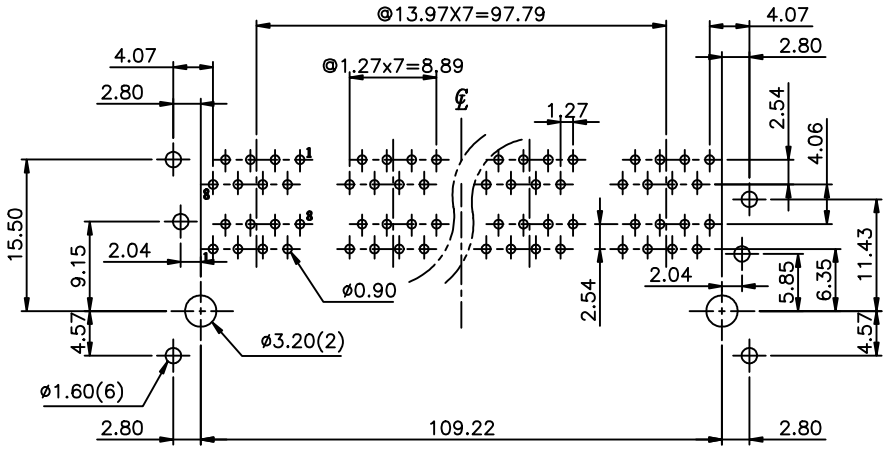

PC Board Layout
Component Side Shown

NOTES:

ELECTRICAL:

1. VOLTAGE RATING : 125 VAC RMS.
2. CURRENT RATING : 1.5 AMP.
3. CONTACT RESISTANCE : 50 MILLIOHMS MAX.
4. INSULATION RESISTANCE: 1000 MEGOHMS MIN @ 500 VDC.
5. DIELECTRIC STRENGTH : 1000 VAC RMS 60Hz, 1MIN.

MECHANICAL:

1. HOUSING MATERIAL : NYLON+30%.GF(FR52) UL94V-0.
2. INSERT MATERIAL : PBT+30%.G.F(FR50) UL94V-0.
3. CONTACT MATERIAL : PHOSPHOR BRONZE ø0.46mm.
4. PLATING : GOLD PLATING OVER NICKEL.
5. OPERATING LIFE : 750 CYCLES MIN.
6. PCB RETENTION PRE-SOLDER : 1 LB MIN.
7. PCB RETENTION POST-SOLDER: 10 LBS MIN.

ENVIRONMENTAL:

1. STORAGE : -40°C TO +85°C.
2. OPERATION: 0°C TO 70°C.
3. WAVE SOLDERING TEMPERRATURE: 255°C ~ 265°C (5~10 SECONDS).

MATES WITH MODULAR PLUG CONFORMING TO FCC PART 68, SUBPART F.

ROHS PART NUMBER: E5908-57GLMX-L

Gold Thickness:
1- 3u" 2- 6u" 3-15u"
4-30u" 5-50u"

MM (INCH)	DFTO WYJ	DATE 08/01/05'	FULL RISE ELECTRONIC CO., LTD
TOLERANCES EXCEPT AS NOTED	CHKD	DATE	
MM .0 ±0.2 ± .00 ±0.15 ± .000 ±0.075 ±	MFO	DATE	TITLE RJ45 STACKED GANGED JACK, 2X8
	APPVL XLF	DATE 08/01/05'	
	MATERIAL :		
ANGLES ± 0.5	QT'Y :		DRAWING NO. GE593A94-LB / PART NO. SEE NOTE — SIZE A3 — REV 0
THIRD ANGLE PROJECTION	FINISH :		
	SCALE : 1.5 : 1		DO NOT SCALE DRAWING — SHEET OF

DETACHED LISTS