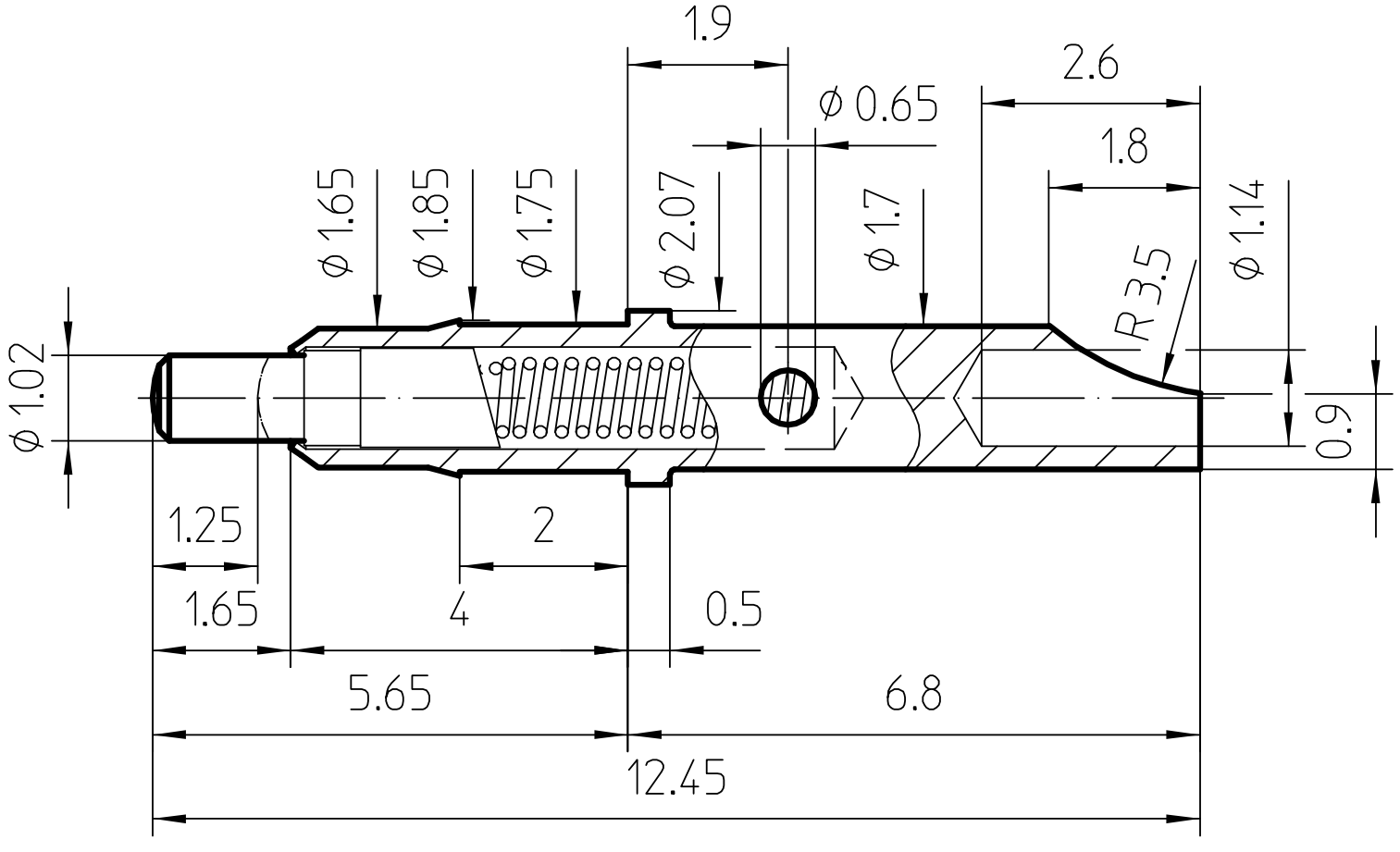

Note: Contact P/N is for basic contact, please add suffix for plating code and, for socket contacts, assembly code.

Contact P/N **90101**

preci-dip