REV.	DESCRIPTION	DATE	DESIGNED
-2	Drawing renewal	Dec.26.2000	K. Yuasa

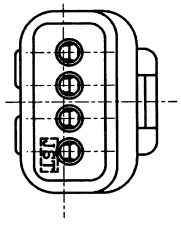

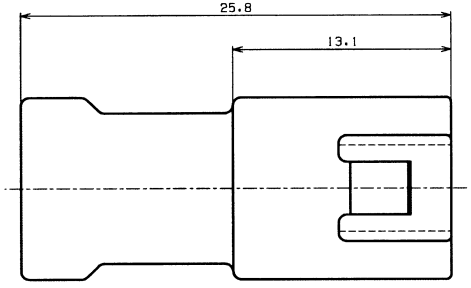

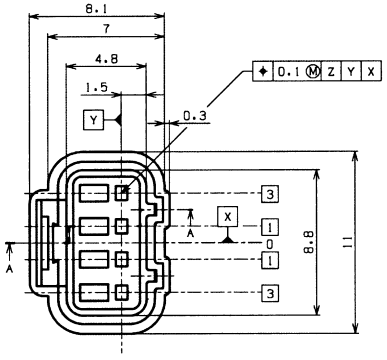

NOTE
1.Unless otherwise specified tolerances are
5≧L>0:±0.2
L>5:±0.3
2.Location of circuit numder

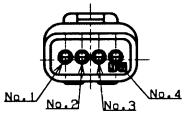

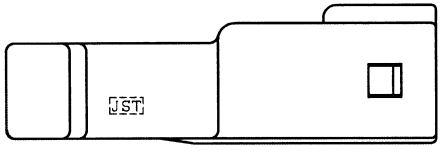

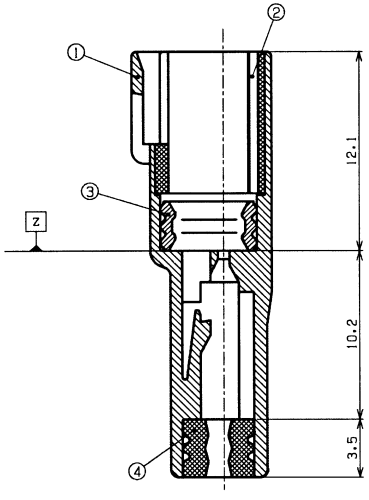

Sect.A-A

JST CORP.
TOKYO
VLC

No.	PART NAME	MATERIAL	SURFACE FINISH	REMARKS
4	Seal Rubber Plate	Si(Light Blue)		
3	Seal Ring	Si(Blue)		
2	Seal Ring Holder	PBT(Yellow)		UL94V-0
1	TAB Housing	PBT(Natural)		UL94V-0

SIZE	UNIT	SCALE	PROJECTION	DATE
A2	METRIC	10:1		DEC.26.2000

APPROVED	CHECKED	DESIGNED	DRAWN
A. Tomita		K. Yuasa	N. Murata

JST J.S.T.MFG.CO, .LTD

CUSTOMER

SERIES NAME	TAB HOUSING ASSEMBLY, JWPF CONNECTOR
PART No.	04T-JWPF-VSLE-S
DRAWING No.	KRD-25219-2 R0

THIS DRAWING CONTAINS INFORMATION THAT IS PROPRIETARY TO J.S.T.
AND SHOULD NOT BE USED WITHOUT WRITTEN PERMISSION.

EC4113-2