Fig. 1

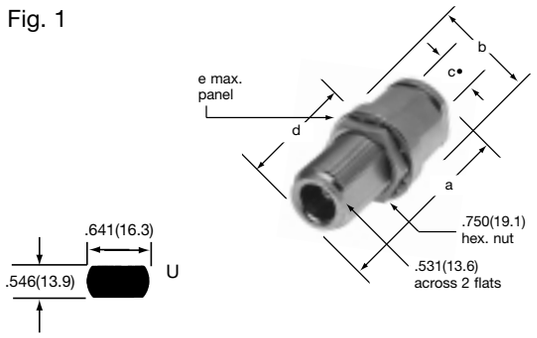

35275

Fig. 2

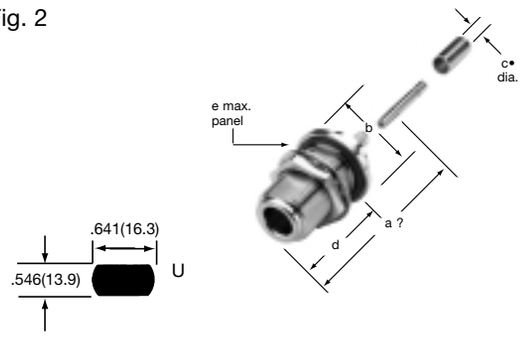

82-5373

Fig. 3

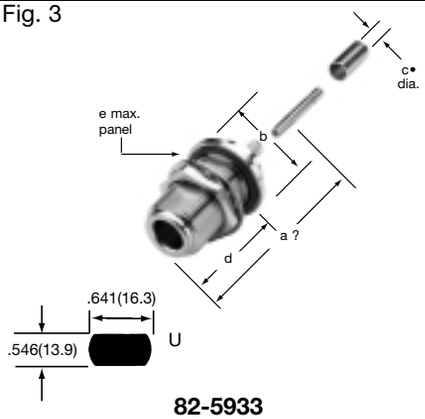

82-5933

Fig. 4

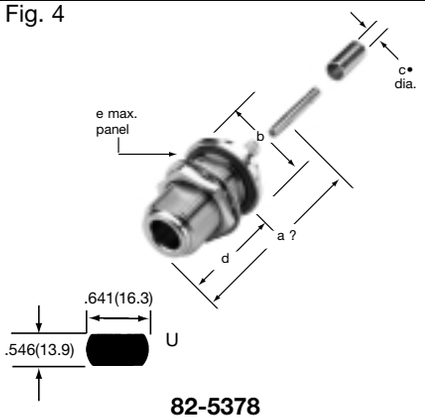

82-5378

Fig. 5

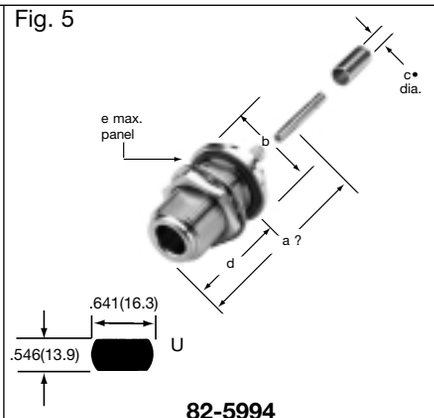

82-5994

Fig. 6

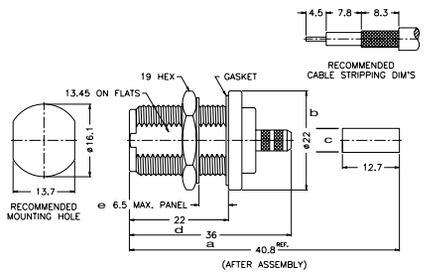

82-6151

Fig. 7

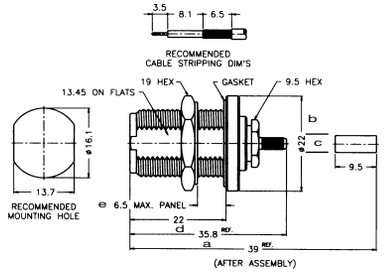

82-6156

Fig. 8

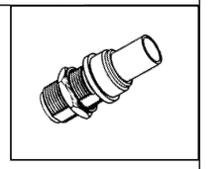

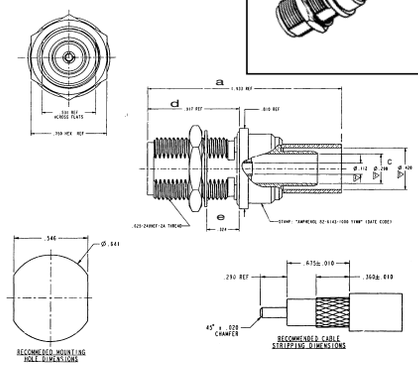

82-6143-1000

N BULKHEAD JACKS

Cable RG-/U	Conn. Type	Cable Attachment		Dimensions, inches (millimeters)					Notes			Mtg Hole	Military Number	Amphenol Number	Fig
		Outer	Inner	a	b	c ?	d	e	CAI	Plt.	Ins.				
55, 58, 141, 142, 223	Bulkh.	Clamp	Solder	1.67(42.5)	.813(20.6)	.224(5.7)	.910(23.1)	.317(8.1)	C8	P1	D1	U	UG-556B/U	35275	1
55, 142, 223	Bulkh.	Crimp	Crimp	1.73(43.9)▪	.872(22.1)	.220(5.6)	.935(23.7)	.250(6.4)	C11	P15	D1	U	–	82-5373	2
188, 316	Bulkh.	Solder	Crimp	1.59(40.4)▪	.866(22.0)	.178(4.5)	.917(23.3)	.315(8.0)	C11	P15	D9	U	–	82-5933	3
58, 141	Bulkh.	Crimp	Crimp	1.74(44.2)▪	.872(22.1)	.206(5.2)	.926(23.5)	.250(6.4)	C11	P34	D1	U	–	82-5378	4
LMR 600	Bulkh.	Crimp	Crimp	2.21(56.1)▪	.933(23.7)	.625(15.9)	.926(23.5)	.250(6.4)	C11	P34	D9	U	–	82-5994	5
LMR 240, 8X	Bulkh.	Crimp	Crimp	1.41(36.0)▪	.866(22.0)	.259(6.6)	.866(22.0)	.255(6.5)	C11	P7	D1	–	–	82-6151	6
174, 188, 316	Bulkh.	Crimp	Crimp	1.53(39.0)▪	.866(22.0)	.133(3.4)	.866(22.0)	.255(6.5)	C11	P7	D1	–	–	82-6156	7
LMR 400	Bulkh.	Crimp	Crimp	1.93(49.0)▪	.750(19.0)	.420(10.6)	.917(23.2)	.324(8.22)	C11	P34	D9	U	–	82-6143-1000	8