THIS DRAWING IS UNPUBLISHED. RELEASED FOR PUBLICATION -,- .
© COPYRIGHT - By - ALL RIGHTS RESERVED.

MATED WITH: PASSEND ZU: HA 16

LOC	DIST	REVISIONS					
—	—	P	LTR	DESCRIPTION	DATE	DWN	APVD
PROJEKT NR.: —			D3	REVISED PER ECO-11-005150	21MAR11	RK	HMR

SCREW TERMINATION

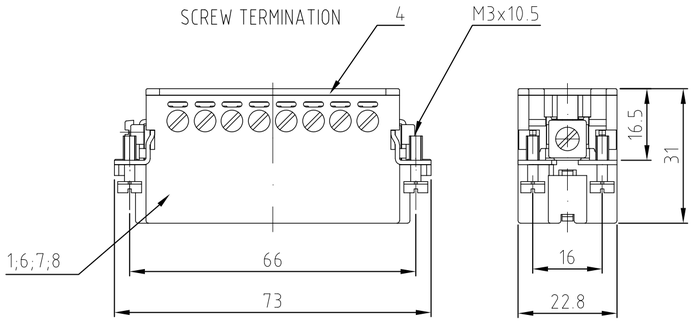

CRIMP TERMINATION

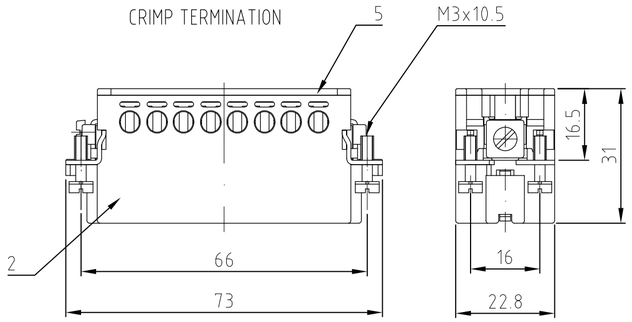

SPRING CLAMP TERMINATION

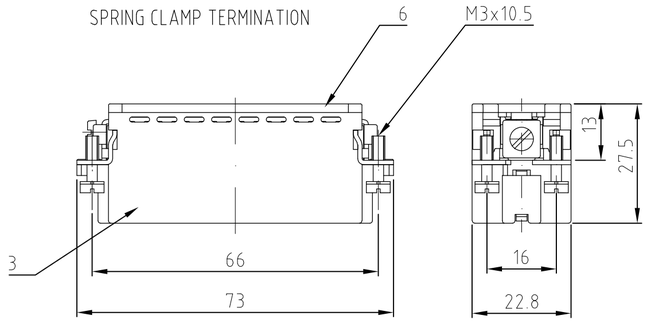

Contact arrangement / view from termination side

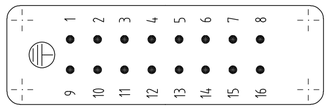

Contact arrangement / view from termination side

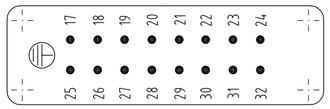

Contact arrangement / view from termination side

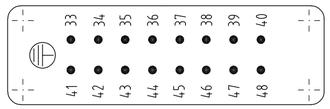

Contact arrangement / view from termination side

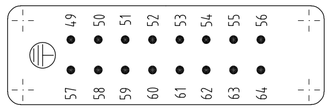

Panel cut-out for contact insert

when used without housing

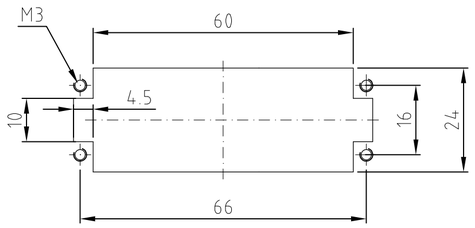

Assembling instruction

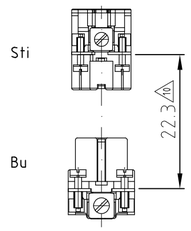

10 DISTANCE FOR SAFETY CONTACT MARKING MAX. 24 mm

NOTES:

1 SUITABLE CRIMP CONTACTS: SERIES HE/HA
OUTER DIMENSIONS OF INSULATION: MAX. Ø3,2 MM

2 SUITABLE HOOD SIZE 5; 7; 9; 11: SERIES HA; HD
SUITABLE INSERTION AND EXTRACTION TOOL:
SCREWDRIVER 0,5x3 DIN 5264

3 Strip lenght: Screw conection 10mm
Spring clamp conection 10mm Crimp conection 7.5mm

4 STANDARDS:
DIN EN 61984; DIN EN 60664-1

5 PACKAGING:
10 SETS IN A CARTON, PRE-MOUNTED

6 SPECIAL PACKAGING: Krauss-Maffei
PACKAGING UNIT: 300 PIECES

7 SPECIAL PACKAGING: Krauss-Maffei
PACKAGING UNIT: 150 PIECES

8 SPECIAL PACKAGING: AIS
PACKAGING UNIT: 250 PIECES

9 SPECIAL PACKAGING: WIELAND
PACKAGING UNIT: 100 PIECES

SEE TE CONNECTIVITY QUALITYMANAGEMENT PROCEDURE NO. 1.12

1-3	1-2	1-0	0-4	0-7	0-6	0-5	2-9	1-9	7-9	7-8	1-8	2-8	1-7	7-7	2-7	7-1	2-3	1-1	DESCRIPTION / BENENNUNG	MATERIAL	COLOR / FARBE	ITEM NO. POS.	REMARKS / BEMERKUNGEN
9	8	7	6	5	5	5	5	5	5	5	5	5	5	5	5	5	5	5					
HA.16.Sti.S.B1-16.WIE	HA.16.Sti.S.B1-16.AIS	HA.16.Sti.S.B17-32.KM	HA.16.Sti.S.B1-16.KM	HA.16.Sti.S-VA.B1-16 OBSOLETE	HA.16.Sti.S-VA.B17-32	HA.16.Sti.S-AU.B1-16	HA.16.Sti.C.B 49-64	HA.16.Sti.S.B 49-64	HA.16.Sti.SC.B 49-64	HA.16.Sti.SC.B 33-48	HA.16.Sti.S.B 33-48	HA.16.Sti.C.B 33-48	HA.16.Sti.S.B 17-32	HA.16.Sti.SC.B 17-32	HA.16.Sti.C.B 17-32	HA.16.Sti.SC.B 1-16	HA.16.Sti.C.B 1-16	HA.16.Sti.S.B 1-16	ORDERING TEXT / BESTELLTEXT				
				1															Pin insert screw	PBT	light beige	8	with stainless steel-fixing screw
					1														Pin insert screw	PBT	light beige	7	with stainless steel-fixing screw
						1													Pin insert screw	PBT	light beige	6	with AU contact
									1	1				1		1			Cover	PBT	light beige	5	
							1					1			1		1		Cover	PBT	light beige	4	
1	1	1	1	1	1	1		1			1		1					1	Cover	PBT	light beige	3	
									1	1				1		1			pin insert spring clamp	PBT	light beige	2	
1	1	1	1				1	1			1	1	1		1		1	1	pin insert crimp/screw	PBT	light beige	1	

THIS DRAWING IS A CONTROLLED DOCUMENT.

DIMENSIONS: mm

TOLERANCES UNLESS OTHERWISE SPECIFIED:
n ISO 8015
n DIN 7168 - m/s -E
n DIN 13451 - n/s

0 PLC	±	-
1 PLC	±	-
2 PLC	±	-
3 PLC	±	-
4 PLC	±	-
ANGLES	±	-

MATERIAL -

FINISH -

DWN	Schneider	09.02.2000
CHK	Schweiger	09.02.2000
APVD	—	
PRODUCT SPEC	108-74007	
APPLICATION SPEC	114-77009	
WEIGHT	—	

TE Connectivity

NAME: Male insert HA.16.Sti.C

SIZE	CAGE CODE	DRAWING NO	RESTRICTED TO
A2	00779	C-1103416	—

CUSTOMER DRAWING | SCALE 1:1 | SHEET 1 OF 1 | REV D3

1471-9 (3/11)