THIS DRAWING IS UNPUBLISHED. RELEASED FOR PUBLICATION ,19 .
© COPYRIGHT 19 BY AMP INCORPORATED. ALL RIGHTS RESERVED.

LOC	DIST
DY	-

REVISIONS

P	LTR	DESCRIPTION	DATE	DWN	APVD
	0	NPR FP00-0349-04	20JAN05	LWY	VT

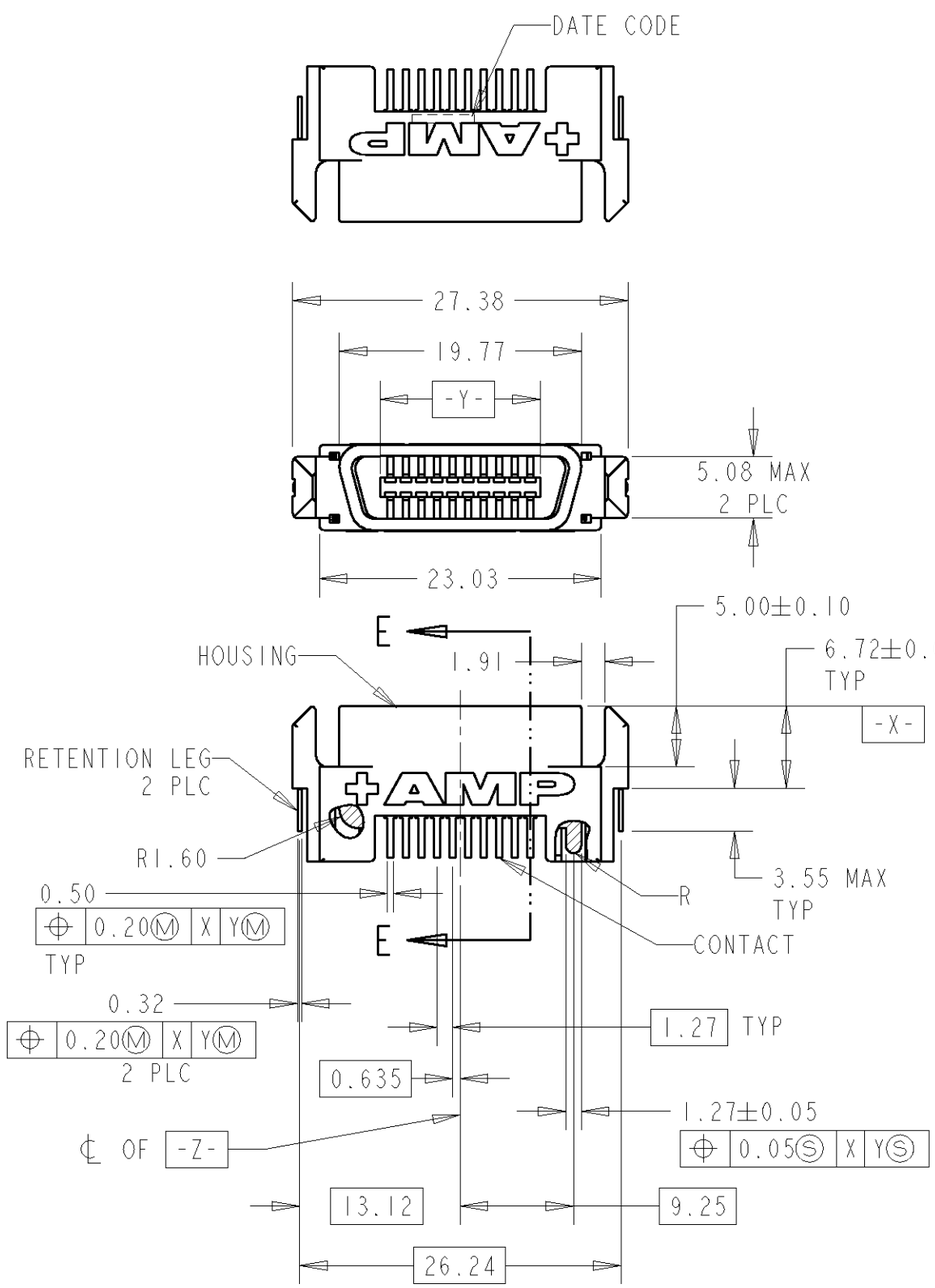

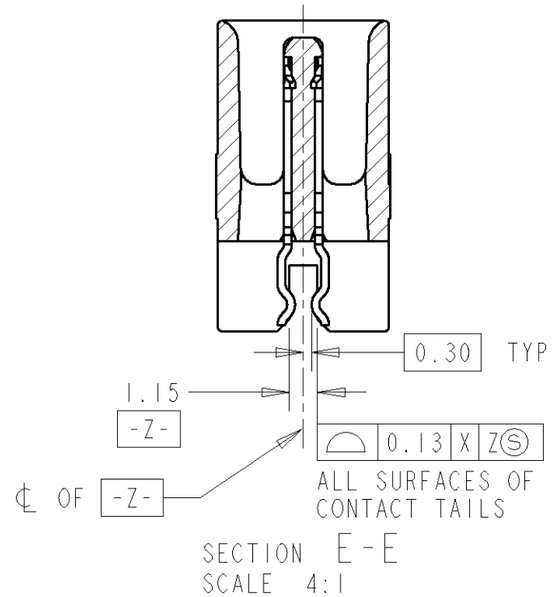

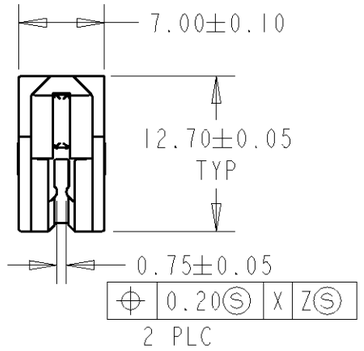

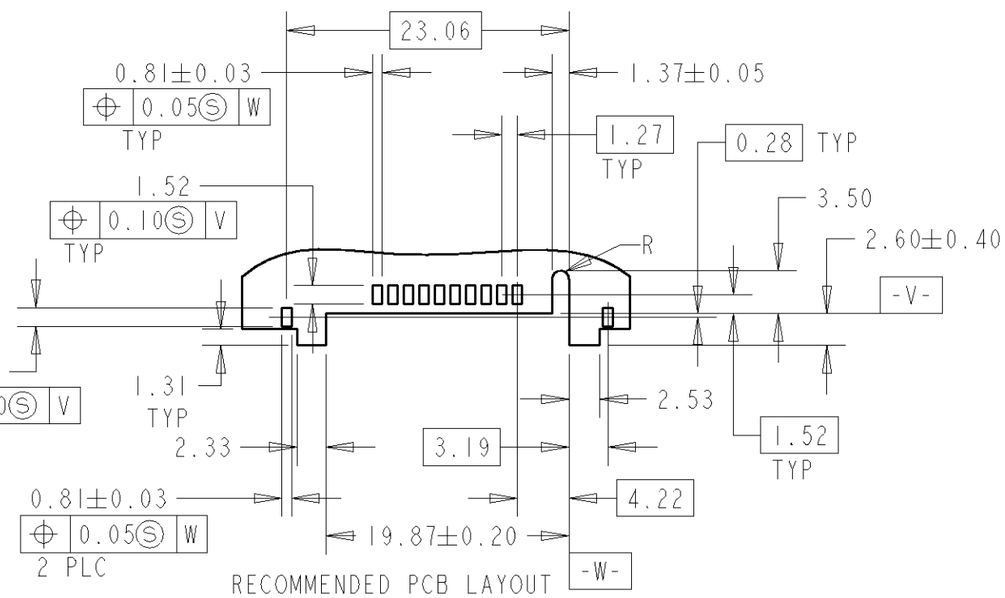

NOTES:

1. HOUSING: LCP, UL 94V-0 RATED, BLACK
   CONTACTS: PHOSPHOR BRONZE
   RETENTION LEGS: BRASS

2. CONTACT:
   0.76um MIN GOLD FOR A LENGTH 2.00 STARTING 1.00 MAX FROM MATING END, 3.81um MIN TIN FOR A LENGTH OF 3.43 MIN FROM OPPOSITE END, BOTH OVER 1.27um MIN NICKEL
   RETENTION LEG:
   3.81 um MIN TIN OVER 1.27um MIN NICKEL

3. RECOMMENDED PCB THICKNESS: 0.80±0.10

P/N: -1 AS SHOWN

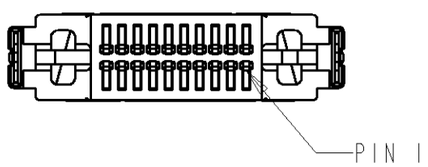

THIS DRAWING IS A CONTROLLED DOCUMENT FOR AMP INCORPORATED. IT IS SUBJECT TO CHANGE AND THE CONTROLLING ENGINEERING ORGANIZATION SHOULD BE CONTACTED FOR THE LATEST REVISION.

DIMENSIONS: mm

TOLERANCES UNLESS OTHERWISE SPECIFIED:

0 PLC	±-
1 PLC	±-
2 PLC	±0.15
3 PLC	±-
4 PLC	±-
ANGLES	±1°

MATERIAL 1

FINISH 2

DWN WYLEE 20JAN05
CHK VINCENT TAN
APVD SF LEONG
PRODUCT SPEC 108-1548
APPLICATION SPEC 114-6061
WEIGHT -

CUSTOMER DRAWING

tyco Electronics — Tyco Electronics Singapore Pte. Ltd.

NAME: PLUG ASSY, STRADDLE MOUNT, CHAMP BLINDMATE .050 SERIES 1, 20P (NARROW GAP)

SIZE	CAGE CODE	DRAWING NO
A3	00779	C-5084653

SCALE 2:1 SHEET 1 OF 1 REV 0

AMP 1470-19 REV 09MAY94

Pro/ENGINEER DRAWING