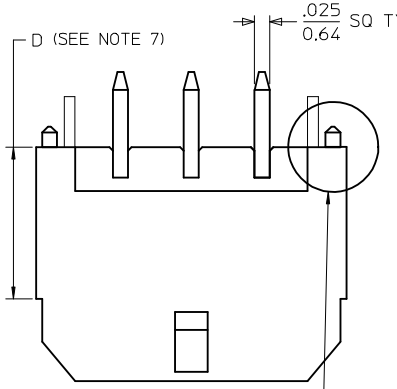


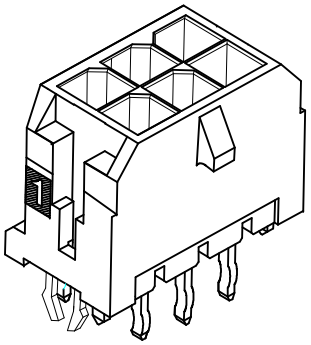

NOTE : (2) POLARIZATION PEGS ARE SHOWN. HOWEVER, ASSEMBLIES MAY BE MANUFACTURED WITH (1) PEG ONLY.

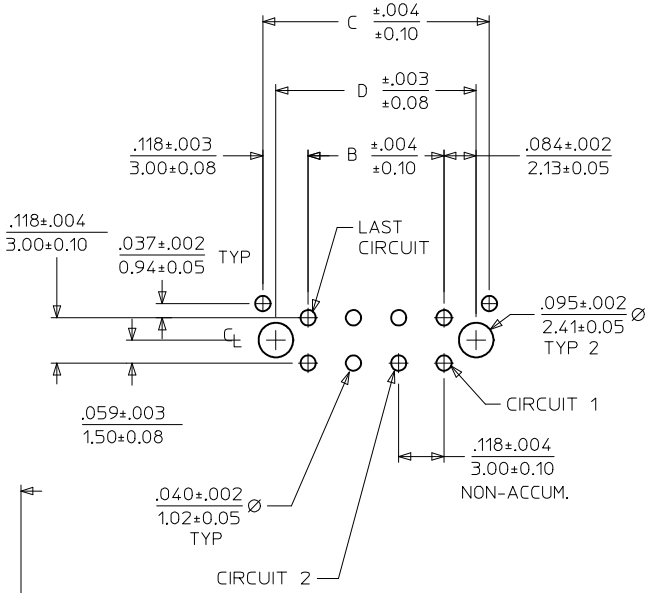


PCB LAYOUT: COMPONENT SIDE
RECOMMEND PCB THICKNESS: .062/1.57

| CKTS | A | B | C | D |
|---|---|---|---|---|
| 04 | .380 / 9.65 | .118 / 3.00 | .354 / 9.00 | .287 / 7.30 |
| 06 | .498 / 12.65 | .236 / 6.00 | .472 / 12.00 | .406 / 10.30 |
| 08 | .616 / 15.65 | .354 / 9.00 | .591 / 15.00 | .524 / 13.30 |
| 10 | .734 / 18.65 | .472 / 12.00 | .709 / 18.00 | .642 / 16.30 |
| 12 | .852 / 21.65 | .591 / 15.00 | .827 / 21.00 | .760 / 19.30 |
| 16 | 1.088 / 27.65 | .827 / 21.00 | 1.063 / 27.00 | .996 / 25.30 |
| 24 | 1.561 / 39.65 | 1.299 / 33.00 | 1.535 / 39.00 | 1.469 / 37.30 |

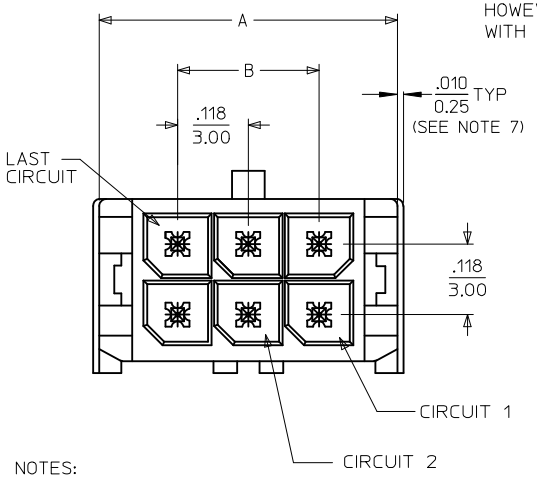


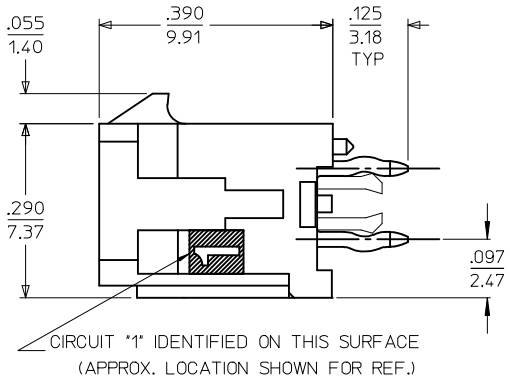


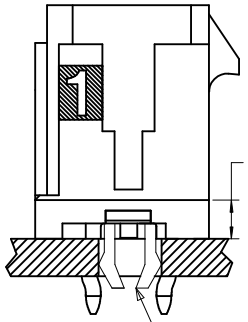


NOTES:

1. HOUSING MATERIAL: GLASS FILLED LIQUID CRYSTAL POLYMER, UL94V-0, COLOR: BLACK
   TERMINAL MATERIAL: BRASS ALLOY
2. FINISH:
   A = .000060/(0.00152) MIN. REFLOWED MATTE TIN OVER .000050/(0.00127) MIN. NICKEL PLATE. (FINISH IS BRIGHT IN APPEARANCE, THICKNESS AS APPLIED PRIOR TO REFLOW)
   B = .000015/(0.00038) MIN. SELECT GOLD IN CONTACT AREA; .000100/(0.00254) MIN. SELECT MATTE TIN ON SOLDER TAILS; BOTH OVER .000050/(0.00127) MIN. NICKEL PLATE.
   C = .000030/(0.00076) MIN. SELECT GOLD IN CONTACT AREA; .000100/(0.00254) MIN. SELECT MATTE TIN ON SOLDER TAILS; BOTH OVER .000050/(0.00127) MIN. NICKEL PLATE.
3. PRODUCT SPECIFICATION: PS-43045
4. TRAY PACKAGED: SEE MOLEX DRAWING PK-70873-0314
5. MATES WITH MICRO FIT (3.0) RECEPTACLE SERIES 43025
6. THE PRIMARY SHIPPING CARTON WILL BE LABELED, "COMPLIANT TO RoHS DIRECTIVE 2002/95/EC AND ELV ANNEX II OF DIRECTIVE 2000/53/EC." ASSEMBLIES WILL BE COMPLIANT TO THE RoHS AND ELV (LEAD-FREE) DIRECTIVES.
7. CIRCUIT SIZES 2-6: "D" IS .265/6.74 FOR .010/0.25 STEP
   CIRCUIT SIZES 8-24: "D" IS .063/1.60 FOR .010/0.25 STEP.
8. THIS PART CONFORMS TO CLASS B REQUIREMENTS OF COSMETIC SPECIFICATION PS-45499-002.

| CKTS | FINISH A MATERIAL NO: | FINISH B MATERIAL NO: | FINISH C MATERIAL NO: |
|---|---|---|---|
| 04 | 43045-5424 | | |
| 06 | 43045-5624 | | 43045-5626 |
| 08 | | 43045-5825 | |
| 10 | | | 43045-6026 |
| 12 | | 43045-6225 | 43045-6226 |
| 16 | 43045-6624 | | |
| 24 | | 43045-7425 | 43045-7426 |

REVISE FINISH A
EC NO: UCP2016-0464 2015/08/20
DRWN:JDFOX 2015/08/20
CHKD:SSOUSEK 2015/11/19
APPR:FSMITH
DESCRIPTION
C1
REV

QUALITY SYMBOLS
E =0
E =0
E =0

GENERAL TOLERANCES (UNLESS SPECIFIED)

| | mm | INCH |
|---|---|---|
| 4 PLACES | ± --- | ± --- |
| 3 PLACES | ± --- | ± .010 |
| 2 PLACES | ± 0.25 | ± .014 |
| 1 PLACE | ± 0.36 | ± --- |
| 0 PLACE | ± | ± |

ANGULAR ±1/2°
DRAFT WHERE APPLICABLE MUST REMAIN WITHIN DIMENSIONS

DIMENSION STYLE: IN/MM
SCALE: NONE
DESIGN UNITS: METRIC
THIRD ANGLE PROJECTION

| | | |
|---|---|---|
| DRAWN BY: RHOLTS | DATE: 2004/07/23 | |
| CHECKED BY: LSCHMIDT | DATE: 2004/07/23 | |
| APPROVED BY: FSMITH | DATE: 2004/07/23 | |
| MATERIAL NO.: SEE CHART | DOCUMENT NO.: SD-43045-023 | SHEET NO.: 1 OF 1 |

TITLE: MICRO-FIT (3.0) DUAL ROW VERTICAL THRU HOLE HEADER W/CLIPS, LEADFREE

molex

SIZE: C

THIS DRAWING CONTAINS INFORMATION THAT IS PROPRIETARY TO MOLEX INCORPORATED AND SHOULD NOT BE USED WITHOUT WRITTEN PERMISSION