MICRO SWITCH
a Honeywell Division
FED.MFG.CODE 91929

SWITCH ASSEMBLY

CATALOG LISTING
38HM20

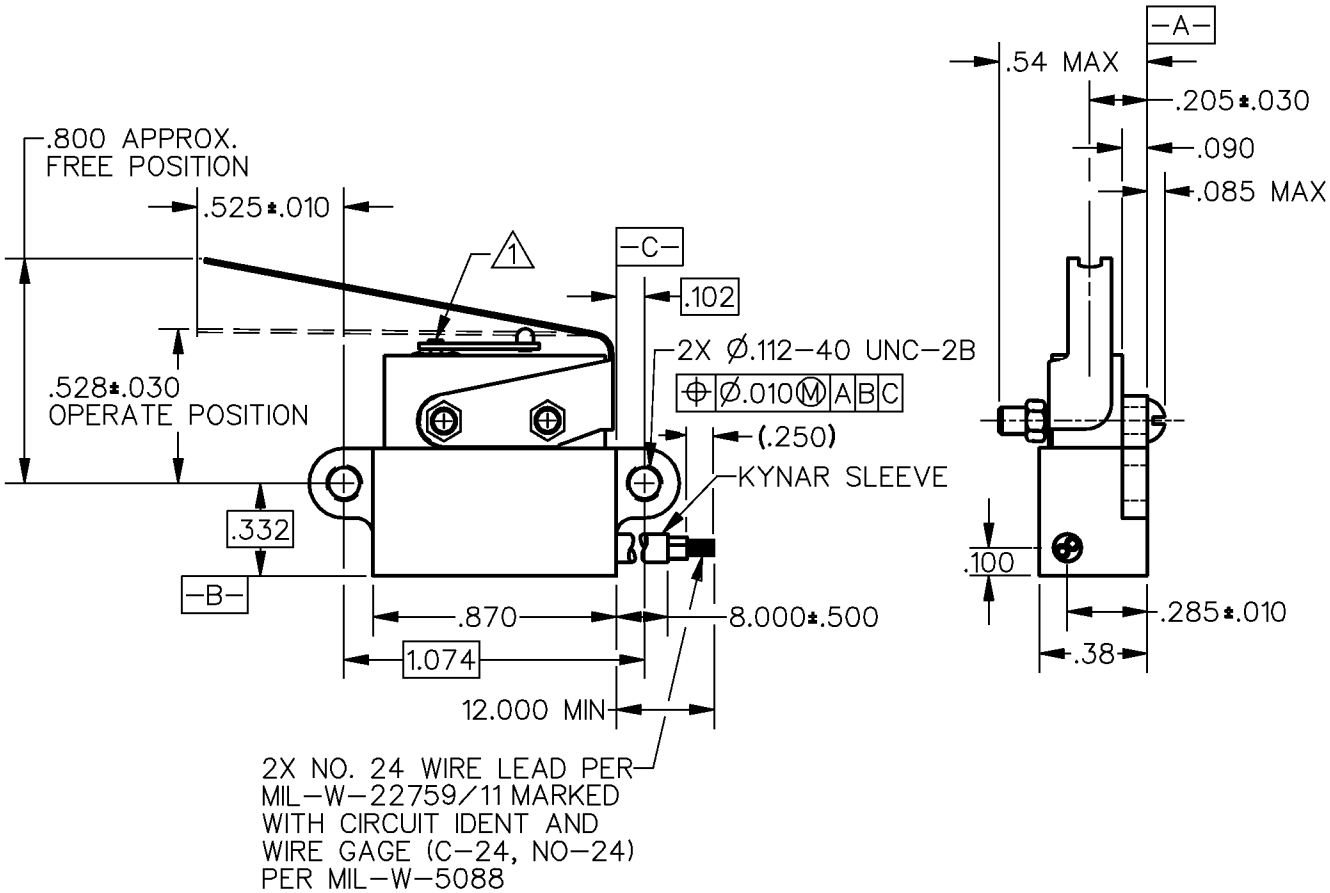

NOTES
1 ADJUSTMENT CAUTION: DO NOT ALLOW ACTUATOR LEAF TO COME IN CONTACT WITH HM LEVER TO PREVENT SWITCH SEAL DAMAGE
2 – ASSEMBLY INCLUDES: "20HM" TYPE BASIC SWITCH AND JS TYPE ACTUATOR
3 – ALL EXPOSED PARTS ARE OF CORROSION RESISTANT MATERIALS
4 – GOLD ALLOY STATIONARY CONTACTS AND 24K GOLD MOVABLE CONTACT
5 – FOR USE IN TEMPERATURE RANGE –300°F TO +350°F

THIS DRAWING COVERS A PROPRIETARY ITEM AND IS THE PROPERTY OF MICRO SWITCH, A DIVISION OF HONEYWELL. THIS DRAWING IS NOT TO BE COPIED OR USED WITHOUT THE APPROVAL OF MICRO SWITCH.

THIRD ANGLE PROJECTION

CHARACTERISTICS	ELECTRICAL DATA	SCALE 1.5:1	DO NOT SCALE PRINT
OPERATING FORCE — — — — 6 OZ MAX	CONTACT ARRANGEMENT SPNO	UNLESS OTHERWISE SPECIFIED TOLERANCES ARE	
RELEASE FORCE — — — — — 1 OZ MIN	28 VOLTS DC RATING	ONE PLACE (.0)	±.030
DIFFERENTIAL TRAVEL — — — .120 MAX	INDUCTIVE----SEA LEVEL--1/4 AMP	TWO PLACE (.00)	±.015
OVERTRAVEL — — — — — — .120 MIN	70,000 FT--1/4 AMP	THREE PLACE (.000)	±.005
	RESISTIVE----SEA LEVEL--1/2 AMP	ANGLES	±
	70,000 FT--1/2 AMP	WEIGHT .80 OZ MAX	

CATALOG LISTING 38HM20
PAGE 1 OF 1
REPLACES
RELEASE NO. PR-20776
ISSUE 10
M

REVISIONS

A	PR-20776	TSM 10 NOV 93
B	CO-84436	LJK 15 MAR 97
C	CO-94220	DLT 25 MAR 99
D	0000107	TSM 3 APR 03
E	0079652	SBH 22JUL11

CHECK 22JUL11
CMH
CHECK
12 NOV 93
SAV
CHECK
10 NOV 93
TSM
DRAWN
RASTER