SAM D10

SAM D10 Xplained Mini

USER GUIDE

Introduction

This user guide describes how to get started with the Atmel® ATSAMD10 Xplained Mini board. The ATSAMD10 Xplained Mini evaluation kit is a hardware platform to evaluate the Atmel ATSAMD10 microcontroller. The evaluation kit comes with a fully integrated debugger that provides seamless integration with Atmel Studio 6.2 (and later version). The kit provides access to the features of the ATSAMD10 enabling easy integration of the device in a custom design.

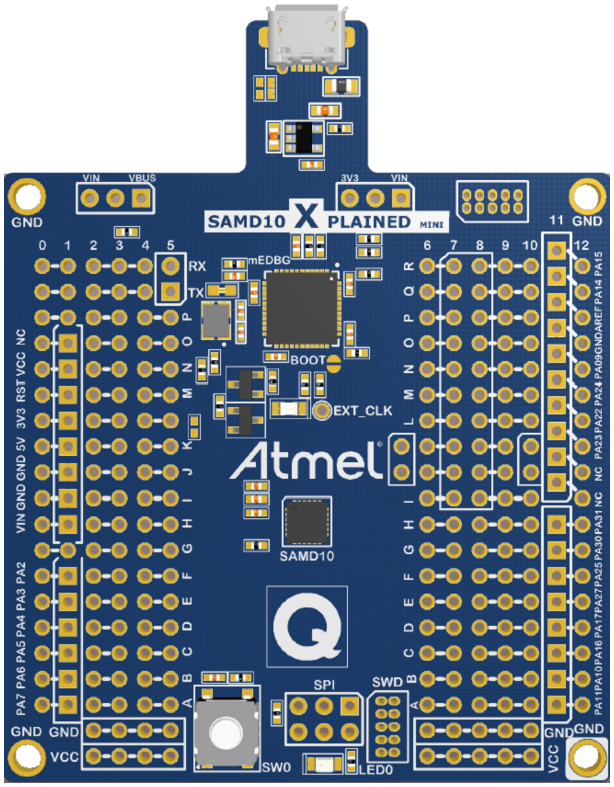

Table of Contents

Introduction....1

1. Getting Started....3
   - 1.1. Features....3
   - 1.2. Design Documentation and Related Links....3
   - 1.3. Xplained Mini Quick Start....3
     - 1.3.1. Connect to Atmel Studio....3
     - 1.3.2. Connect to the COM Port....4
   - 1.4. Programming and Debugging....4
     - 1.4.1. Programming the Target Using mEDBG....4
     - 1.4.2. Debugging the Target Using mEDBG....4
     - 1.4.3. Programming the Target Using an External Programmer....5
     - 1.4.4. Programming the ATmega32U4 Using an External Programmer....5
     - 1.4.5. Programming the ATmega32U4 Using a Bootloader....6
   - 1.5. Board Assembly....6
     - 1.5.1. Custom Assembly....6
     - 1.5.2. Standalone Node....6
     - 1.5.3. Connecting an Arduino Shield....6
   - 1.6. mEDBG Command Line Interface....7
     - 1.6.1. mEDBG Low Power Modes....7
     - 1.6.2. How to Issue Commands....7

2. Hardware User Guide....9
   - 2.1. Board Overview....9
   - 2.2. Target Headers and Connectors....9
     - 2.2.1. Target Digital I/O....9
     - 2.2.2. Board Power Header....10
     - 2.2.3. Target Analogue I/O....10
     - 2.2.4. Target SPI Header....11
     - 2.2.5. Target Programming....11
   - 2.3. Target GUI....11
     - 2.3.1. Push Button....11
     - 2.3.2. User LED....12
     - 2.3.3. QTouch Button....12
   - 2.4. On-board Power Supply....13
   - 2.5. mEDBG....14
     - 2.5.1. mEDBG Status LED....14
     - 2.5.2. mEDBG External Clock....14
     - 2.5.3. mEDBG COM Port Connection....14
     - 2.5.4. mEDBG JTAG Interface....14
     - 2.5.5. mEDBG USB Interface....15
   - 2.6. Extension Header Area....15
   - 2.7. Factory Programmed....17

3. Document Revision History....18

1. Getting Started

1.1. Features

The ATSAMD10 Xplained Mini evaluation board provides a development platform for the Atmel ATSAMD10.

Key Features

- On-board debugger with full source-level debugging support in Atmel Studio
- Auto-ID for board identification in Atmel Studio
- Access to all signals on target MCU
- One green mEDBG status LED
- One yellow user LED
- One mechanical user push button
- QTouch® user area
- Virtual COM port (CDC)
- 8MHz external target clk
- USB powered
- 3.3V regulator
- Arduino shield compatible foot prints
- Target SPI bus header foot print
- Xplained Pro extension headers can easily be strapped in

1.2. Design Documentation and Related Links

The most relevant documents and software for the evaluation board are available here:

Design Documentation - A .zip file containing CAD source, schematics, BOM, assembly drawings, 3D plots, layer plots, etc.

Atmel Studio - Free Atmel IDE for development of C/C++ and assembler code for Atmel microcontrollers.

Xplained - Atmel Xplained prototyping and evaluation platform.

Atmel Spaces - Open Source projects for Xplained Mini.

1.3. Xplained Mini Quick Start

How to connect the ATSAMD10 Xplained Mini board embedded debugger to Atmel Studio and how to connect the ATSAMD10 UART to a COM port.

1.3.1. Connect to Atmel Studio

How to connect the ATSAMD10 Xplained Mini board embedded debugger to Atmel Studio to get started with SW development.

1. Download and install Atmel Studio version 6.2 or later versions.
2. Launch Atmel Studio.
3. Connect the board to the USB port and it will be visible in Atmel Studio.

1.3.2. Connect to the COM Port

How to connect the ATSAMD10 UART to a COM port.

All Xplained Mini boards have an embedded debugger (mEBDG) with a number of features, among them a CDC/COM port, which enables the user to connect the ATSAMD10 UART to the PC.

1. Connect the Xplained Mini USB to the PC.
2. A COM port named "mEDBG Virtual COM Port" will be available.
3. Start a terminal emulator or other applications using the COM port, typical COM port settings are 9600 baud N81.

1.4. Programming and Debugging

Programming and debugging the ATSAMD10 Xplained Mini.

The target microcontroller is the ATSAMD10.

The mEDBG FW is running on the ATmega32U4.

1.4.1. Programming the Target Using mEDBG

Using the Embedded Debugger on the ATSAMD10 Xplained Mini board to program the ATSAMD10.

1. Connect the Xplained Mini USB to the PC.
2. Go to Atmel Studio: click the Tools tab, select Device Programming, and select the connected mEDBG as **Tool** with **Device** as ATSAMD10 and **Interface** to SWD, click **Apply**.
3. Select "Memories" and locate the source .hex or .elf file and click Program.

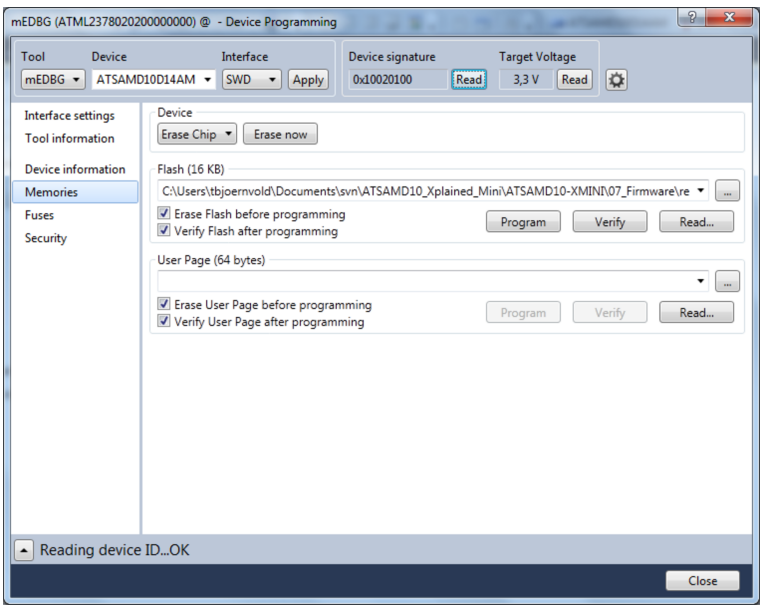

1.4.2. Debugging the Target Using mEDBG

Using the Embedded Debugger on the ATSAMD10 Xplained Mini board to debug the ATSAMD10 via SWD.

1. Start Atmel Studio.
2. Connect the Xplained Mini USB to the PC.
3. Open your project.

4. Click the "Project" tab and select the project "properties", click the "Tools" tab and select mEDBG as debugger and SWD as interface.
5. Click the "Debug" tab and select "Start Debugging and Break".
6. A debug session is started with a break in main, debugging can start.

1.4.3. Programming the Target Using an External Programmer

How to program the target ATSAMD10 using the Atmel-ICE or other Atmel Programmers.

1. Connect the External Programmer USB to the PC.
2. Connect the External Programmer to the ATSAMD10 Xplained Mini board SWD connector.
3. Go to Atmel Studio: Click the Tools tab, select Device Programming, and select the External Programmer connected as **Tool** with **Device** as ATSAMD10 and **Interface** to SWD, click **Apply**.
4. Select "Memories" and locate the source .hex or .elf file and click Program.

1.4.4. Programming the ATmega32U4 Using an External Programmer

How to program the ATmega32U4 using the AVR JTAGICE mkII, JTAGICE3, Atmel-ICE, or other Atmel Programmers.

1. Connect the External Programmer USB to the PC.
2. Connect the External Programmer to the ATSAMD10 Xplained Mini board JTAG connector.
3. Go to Atmel Studio: click the Tools tab, select Device Programming, and select the connected mEDBG as **Tool** with **Device** as ATmega32U4 and **Interface** to JTAG, click **Apply**.
4. Select "Memories" and locate the source .hex or .elf file and click Program.

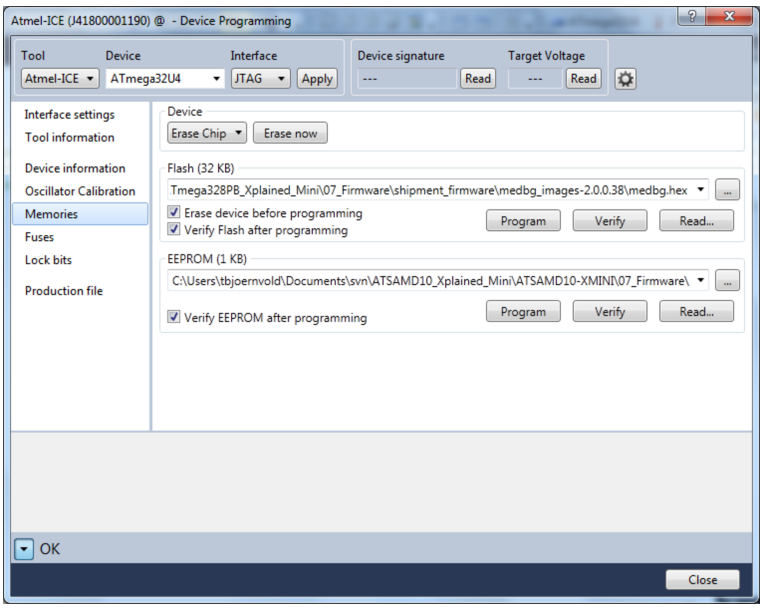

5. Select "Fuses" to program the fuses manually. Set the fuse(s) and click "Program". Recommended fuse settings:

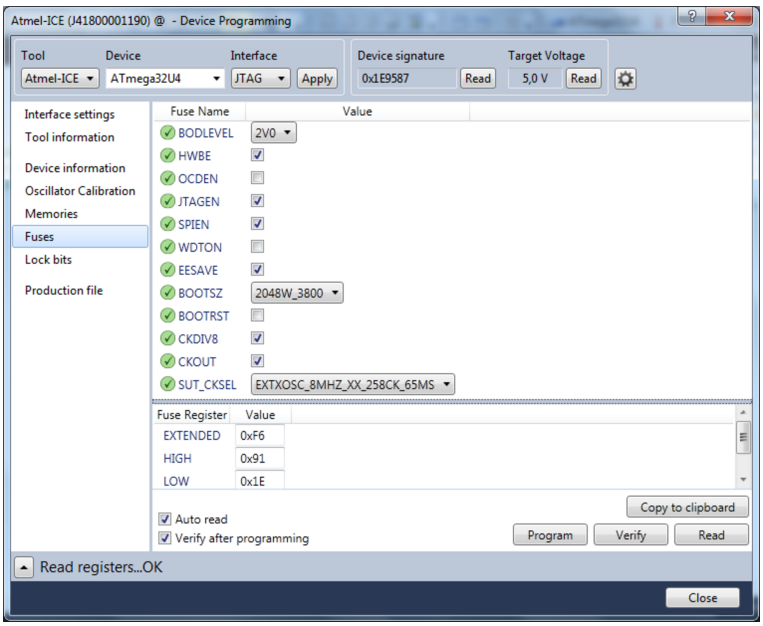

1.4.5. Programming the ATmega32U4 Using a Bootloader

This section describes how to use the bootloader to program the ATmega32U4.

1. Install the Bootloader interface on the PC, download the installer from FLIP.
2. Start the Bootloader PC GUI "FLIP".
3. Short strap J102.
4. Connect the ATSAMD10 Xplained Mini board USB connector to the PC.
5. Select Device = ATmega32U4 (Device - Select).
6. Select USB communication (Ctrl+U).
7. Select memory area to program (use the toggle memory button bellow the Atmel logo).
8. Select Load Hex file (Ctrl+L).
9. Select Programming Options.
10. Click "Run", observe status in status field.

1.5. Board Assembly

The Xplained Mini board can easily be assembled into a product prototype for software development and hardware verification.

1.5.1. Custom Assembly

All signals of the ATSAMD10 are available in the Xplained Mini board connector grid, enabling easy connection of external sensors and output devices in order to prototype the customer specific application.

1.5.2. Standalone Node

The ATSAMD10 Xplained Mini board can be used as a standalone node with an external power source, e.g. the 4xAAA or 2xAAA battery pack available from Atmel.

1.5.3. Connecting an Arduino Shield

Arduino® shields can be mounted in the marked positions (J200, J201, J202, and J203).

1.6. mEDBG Command Line Interface

The mEDBG has a command line interface enabling configuration of the mEDBG.

1.6.1. mEDBG Low Power Modes

There are two modes enabling the Xplained Mini to save power when connected to an external power source other than an USB connection.

Sleep Mode where the mEDBG is disabled. When enabled the ATmega32U4 will enter sleep mode if not enumerated within about 5sec. In this mode the external clock is not available to the target MCU.

1MHz Mode where the mEDBG/ATmega32U4 is set to run at 1MHz, saving power while maintaining the USB connection for the COM port. The external clock will be 1MHz.

Table 1-1 Available Commands

Mode	Command	External CLK	COM port	SWD program	SWD debug
Sleep	0xFB (bit2=0)	disabled	disabled	disabled	disabled
1MHz	0xFD (bit1=0)	1MHz	enabled	useless	useless
Factory settings	0xFF	8MHz	enabled	enabled	enabled

1.6.2. How to Issue Commands

The command line interface is supported by mEDBG version 1.6 or later.

The mEDBG command line interface can be accessed with the Python® script found on Atmel Spaces Releases (mEDBG_script.zip).

If you have Studio 7.0 (and later versions), the mEDBG included supports the command line interface, if not, the mEDBG can be downloaded from Atmel Spaces Releases (medbg_fw.zip).

Basic Python is required to run the script, Python can be downloaded from Python.

How to Issue Commands

1. Install Python.
2. Download the file "mEDBG_script.zip" from Atmel Spaces Releases.
3. Unzip the file "mEDBG_script.zip".
4. Edit "stuff.py" to issue the selected command "c.set_suffer(0xXX)".
5. Open a command window in the directory where "stuff.py" is located. (Browse to the, folder right-click on folder with shift pressed and select “Open command window here”.)
6. Connect the Xplained Mini.
7. Run "stuff.py" (c:\Python27\python stuff.py).
8. The script will print the selected tool and display SUFFER setting.
9. Recycle power (disconnect/connect the board) for the change to take effect.
10. Edit "stuff.py" to issue the command c.set_suffer(0xFF) to reset to factory setting.

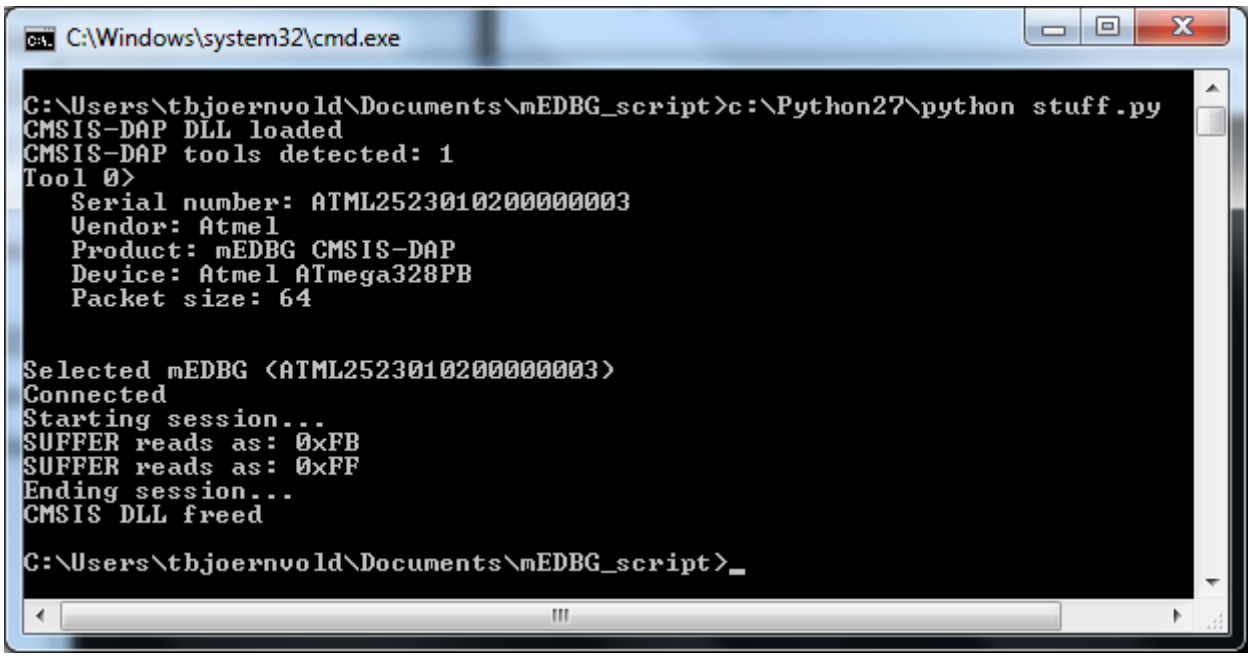

How to Upgrade the Xplained Mini mEDBG

1. Start Atmel Studio.
2. Connect the Xplained Mini to the computer.
3. In Atmel Studio, select Tools – Device programming (Ctrl – Shift – P).
4. In the Device Programming window, select Tool to mEDBG and click Apply. If there is a new mEDBG version available, the Atmel Studio will ask if you want to upgrade.
5. To verify mEDBG version, click "Tool Information" when mEDBG is selected as Tool.

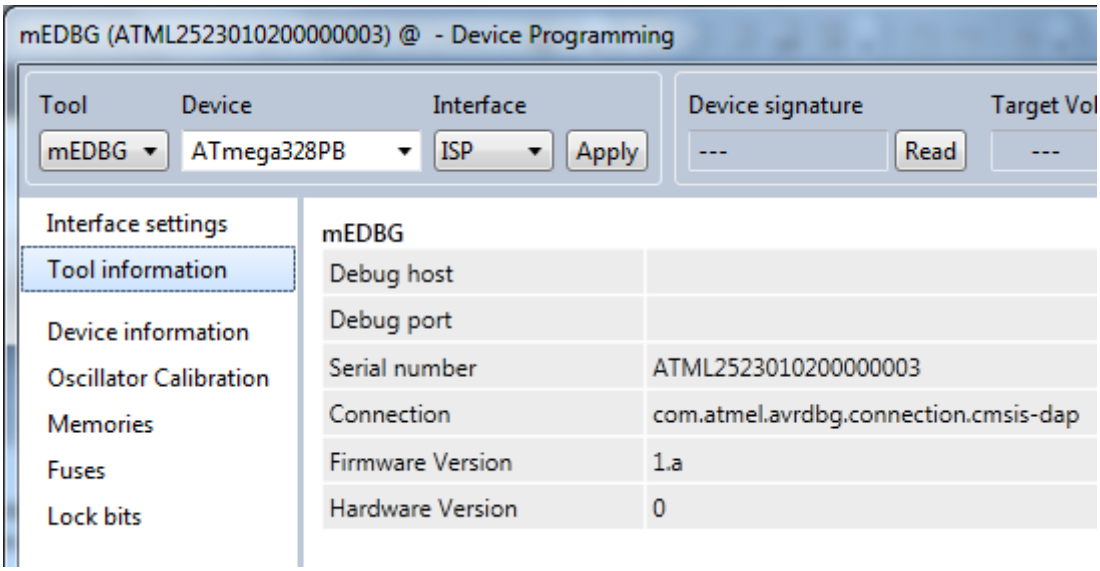

2. Hardware User Guide

2.1. Board Overview

The ATSAMD10 Xplained Mini headers overview.

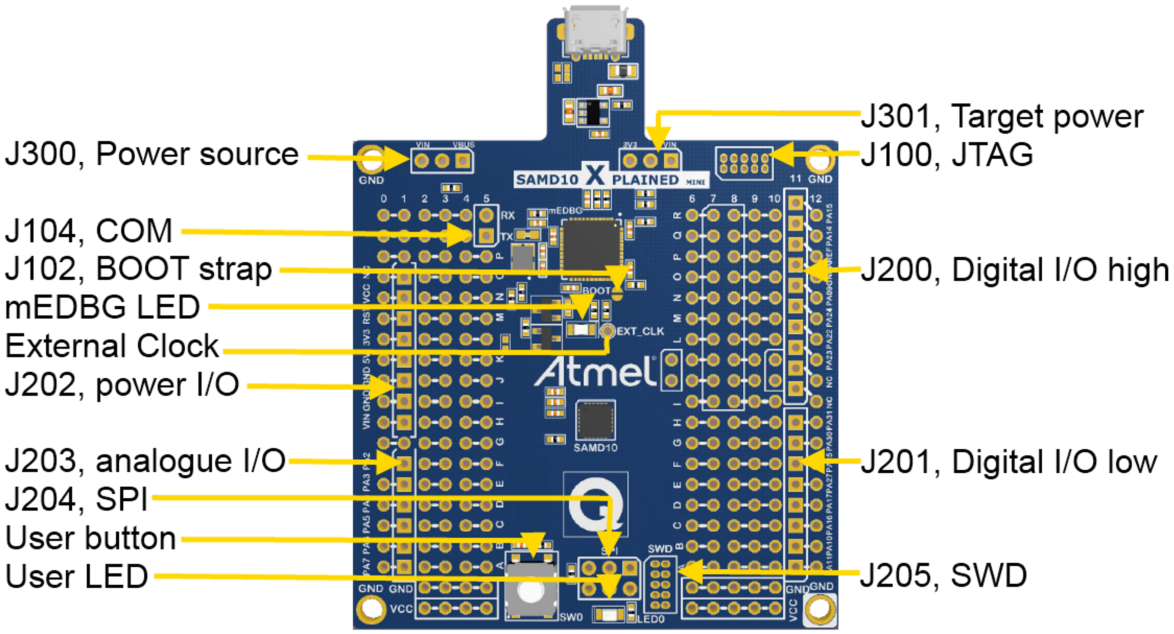

2.2. Target Headers and Connectors

The ATSAMD10 related headers.

2.2.1. Target Digital I/O

The J200 and J201 headers provide access to the ATSAMD10 digital I/O pins.

Table 2-1 J200 Digital I/O High Byte Header

J200 pin	ATSAMD10 pin		Function
1	NC	D8	
2	NC	D9	
3	PA23	D10	SS, SPI Bus Master Slave select, SERCOM1 or TCC0/WO[5]
4	PA22	D11	MOSI, SPI Bus Master Output/Slave Input, SERCOM1 or TCC0/WO[4]
5	PA24	D12	MISO, SPI Bus Master Input/Slave Output, SERCOM1 or TCC0/WO[2]
6	PA09	D13	SCK, SPI Bus Master clock Input, SERCOM1, User LED
7	GND		

J200 pin	ATSAMD10 pin		Function
8	PA03		AREF
9	PA14		SDA, 2-wire Serial Bus Data Input/Output Line. SERCOM2
10	PA15		SCL, 2-wire Serial Bus Clock Line. SERCOM2

Table 2-2 J201 Digital I/O High Low Header

J201 pin	ATSAMD10 pin		Function
1	PA11	D0	TXD (ATSAMD10 USART Output Pin), SERCOM0
2	PA10	D1	RXD (ATSAMD10 USART Input Pin), SERCOM0
3	PA16	D2	
4	PA17	D3	PWM TCC0/WO[7]
5	PA27	D4	
6	PA25	D5	PWM TCC1/WO[5]
7	PA30	D6	PWM TC2/WO[0]
8	PA31	D7	

2.2.2. Board Power Header

The J202 header enables connection to the ATSAMD10 Xplained Mini power system.

Table 2-3 J202 Power Header

J202 pin	Signal	Description
1	NC	
2	VCC_TARGET	The power source selected for the target. (Select by J301)
3	RESET_SENSE	This is a RESET signal monitored by the mEDBG. If pulled low the target RESET line will be pulled low by the mEDBG. The ATmega32U4 internal pull-up is enabled. This signal is not available during debugging.
4	VCC_P3V3	The 3.3V regulator output
5	VCC_P5V0	The selected power source. (VIN or VBUS selected by J300)
6	GND	
7	GND	
8	VCC_VIN	The external power source connection.

2.2.3. Target Analogue I/O

The ATSAMD10 ADC input pins are available in the J203 header.

AREF is available in J200 pin 8.

Table 2-4 J203 Analogue Header

J203 pin	ATSAMD10 pin	Function
1	PA02	ADC Input Channel 0
2	PA03	ADC Input Channel 1
3	PA04	ADC Input Channel 2
4	PA05	ADC Input Channel 3
5	PA06	ADC Input Channel 4
6	PA07	ADC Input Channel 5

2.2.4. Target SPI Header

The SPI bus is available in J204, the SPI header.

Table 2-5 SPI Header

J204 pin	ATSAMD10 pin	Function
1	PA24	MISO
2		VCC target
3	PA09	SCK
4	PA22	MOSI
5	PA28	RESET
6		GND

2.2.5. Target Programming

The J205 SWD header enable direct connection to the SWD bus with an external programmer for programming of the ATSAMD10.

2.3. Target GUI

The ATSAMD10 Xplained Mini user GUI consist of one LED, one push button, and a QTouch button.

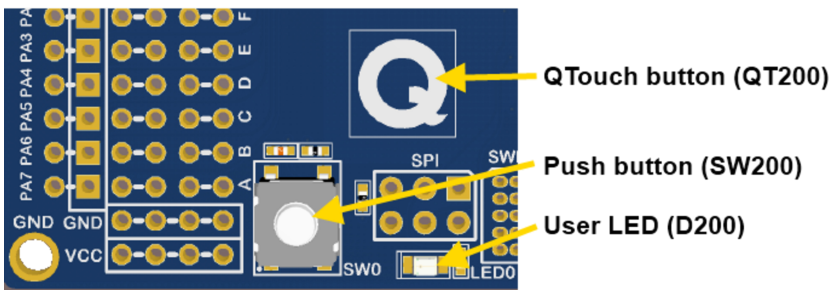

2.3.1. Push Button

A general purpose push button, SW200, is connected to PA25.

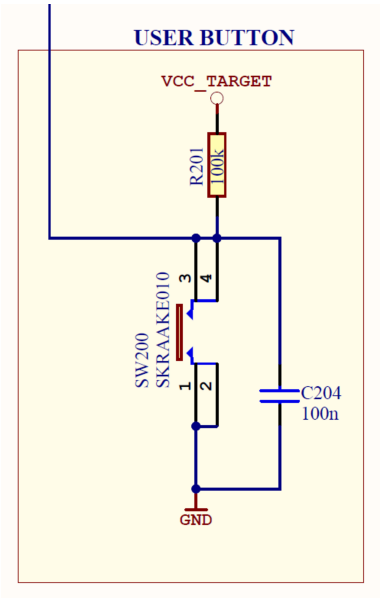

2.3.2. User LED

There is one yellow LED, D200, available for use by the application SW.

The LED is connected to ATSAMD10 PA09/SPI_SCK, also available in the SPI header and the J200 header.

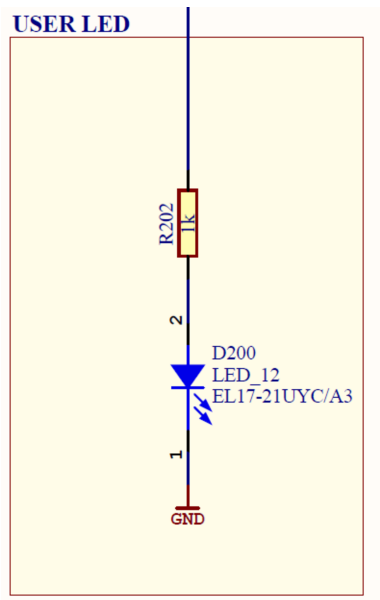

2.3.3. QTouch Button

There is one QTouch button connected to PA07 (Y[5]) via 100kΩ.

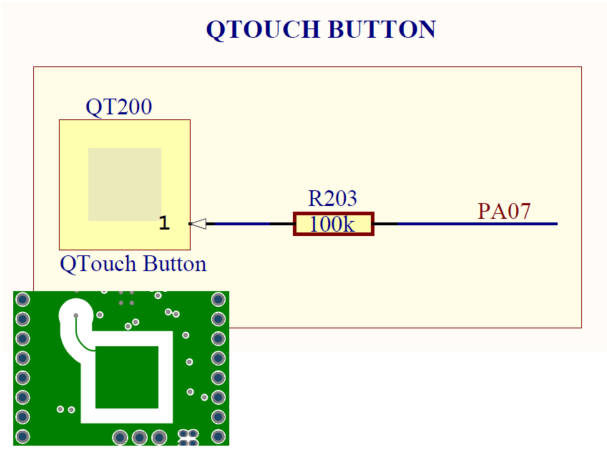

2.4. On-board Power Supply

The ATSAMD10 Xplained Mini board has an on-board 3.3V regulator (150mA) which can be used to power the ATSAMD10.

The J300 and J301 headers configure the ATSAMD10 power supply and the board power source.

The default configuration is set by R300 and R302 0Ω resistors which can be easily removed to change the default configuration.

Table 2-6 Board Power Options

Mode	J301 connection, target	J300 connection, board	Function
VIN/VBUS	pin2 connected to pin1 remove R302	pin2 connected to pin1	Target powered by VIN, USB interface and 3.3V supply powered by VBUS
3.3V USB (Default)	pin2 connected to pin3	pin2 connected to pin1	Target powered by 3.3V, USB interface and 3.3V supply powered by VBUS
VIN	pin2 connected to pin1, remove R302	pin2 connected to pin3, remove R300	Board and target powered by VIN (J202.8), 1.7V < VIN < 3.5V. 3.3V regulator disabled
3.3V VIN	pin2 connected to pin3	pin2 connected to pin3, remove R300	Target powered by 3.3V. VIN (J202.8) as 3.3V regulator input. 4V < VIN < 16V

Tip: Use the BOD LEVEL fuse to avoid the following challenges:
For the CPU to successfully decode and execute instructions, the supplied voltage must always stay above the minimum voltage level set by the chosen operating frequency.

When supplied voltage drops below this level, the CPU may start to execute some instructions incorrectly. The result is unexpected activity on the internal data and control lines.

This activity may cause CPU Registers, I/O Registers, and Data Memories to get corrupted.

To avoid these problems, the CPU should be prevented from executing code during periods of insufficient supply voltage.

2.5. mEDBG

The ATSAMD10 Xplained Mini board has an embedded debugger/programmer enabling debugging and programming of the ATSAMD10 without any additional external equipment.

2.5.1. mEDBG Status LED

The mEDBG has a green status LED connected to ATmega32U4 PC6 to signal the embedded debugger state.

Table 2-7 mEDBG Green Status LED Function

mEDBG state	LED	Function
Enumeration	ON	During the initial USB connection process the LED is on until enumerated or if not enumerated it is turned off within about 5 seconds
Programming	ON	The LED is active during programming
Debugging	ON	The LED is active when the debugger is running

2.5.2. mEDBG External Clock

The mEDBG (ATmega32U4) clock out signal (PC7) is connected to the ATSAMD10

XOSC XIN signal (PA08). It can e.g. be used as an accurate clock source for XOSC or XOSC32K. The External Clock frequency is 8MHz.

Tip: The External Clock can be set to 1MHz to save power using the mEDBG command line interface.

Tip: There is a test point marked EXT.CLK enabling easy measuring and/or connection to the CLK signal.

2.5.3. mEDBG COM Port Connection

The mEDBG provide a CDC COM port connection when connected to a USB host device.

The mEDBG (ATmega32U4) USART is used for communication with the CDC COM port. The USART TX/RX signals are available on the J104 header and are also connected to the ATSAMD10 via 0Ω resistors enabling easy disconnect from the ATSAMD10 if needed.

Table 2-8 J104 USART Header

J104 pin	ATmega32U4	ATSAMD10	Function
1 - USART TxD	PD3	PA11/RxD	TxD out from ATmega32U4
2 - USART RxD	PD2	PA10/TxD	RxD in to ATmega32U4

2.5.4. mEDBG JTAG Interface

The mEDBG (ATmega32U4) JTAG interface is available for programming and debugging of the ATmega32U4.

Table 2-9 J100 JTAG Header

J100 pin	Signal name	Description
1	TCK	
2	GND	
3	TDO	
4	VCC_BOARD	ATmega32U4 V_{CC}
5	TMS	
6	RESET	Connected to ATmega32U4 only
7	NC	
8	NC	
9	TDI	
10	GND	

2.5.5. mEDBG USB Interface

J101 is a Micro-B USB connector connected to the embedded debugger (ATmega32U4).

Table 2-10 J101 USB Header

J101 pin	Signal name
1	VBUS
2	D-
3	D+
4	NC
5	GND

The VBUS has a resettable PTC fuse (F100), with a hold current of 0.5A and a trip current of 1.0A to protect the USB host device.

2.6. Extension Header Area

The marked area on the grid I7 to R8 can be used for strapping in an Xplained Pro extension header or a 10-pin Xplained/RZ600 header.

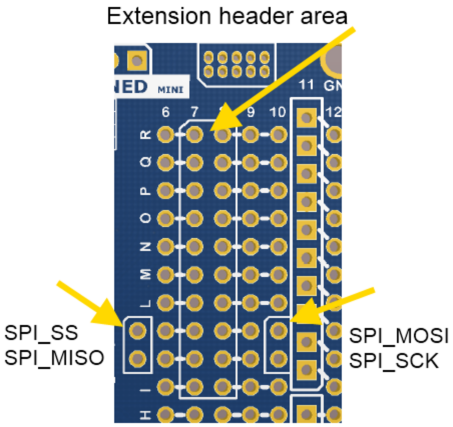

The SPI bus signals are made available close to the header at row J and K, enabling easy connection to header pin 15 to 18.

Using Pin 11 to 20 enables connection of the 10-pin connector used on the RZ600 wireless modules and the 10-pin Xplained sensor modules.

The general bus connections for an Xplained PRO Extension board is indicated in the table below, detailed wiring can be found in the selected extension board documentation.

Table 2-11 Extension Header Typical Signals

Pin	Signal name	Signal description
1	ID	Communication line to the ID chip on the Xplained extension board
2	GND	Ground
3	ADC(+)	Analog to digital converter, alternatively positive part of differential ADC
4	ADC(-)	Analog to digital converter, alternatively negative part of differential ADC
5	GPIO1	General purpose I/O
6	GPIO2	General purpose I/O
7	PWM(+)	Pulse width modulation, alternatively positive part of differential PWM
8	PWM(-)	Pulse width modulation, alternatively negative part of differential PWM
9	IRQ/GPIO	Interrupt request line and/or general purpose I/O
10	SPI_SS_B/ GPIO	Slave B select for SPI and/or general purpose I/O
11	I2C_SDA	Data line for I^2C interface
12	I2C_SCL	Clock line for I^2C interface
13	UART_RX	Receiver line of ATSAMD10 USART
14	UART_TX	Transmitter line of ATSAMD10 USART
15	SPI_SS_A	Slave A select for SPI
16	SPI_MOSI	Master out slave in line of serial peripheral interface
17	SPI_MISO	Master in slave out line of serial peripheral interface

Pin	Signal name	Signal description
18	SPI_SCK	Clock for serial peripheral interface
19	GND	Ground
20	VCC	Power for extension board

2.7. Factory Programmed

The ATSAMD10 is preprogrammed with a demo program, ReMorse.

When the CDC COM port is connected to a terminal window (9600 N81), the text you write will be transmitted via the LED in Morse code. Any Morse code transmitted by using the switch will be displayed as text in the terminal window.

The ATmega32U4 is preprogrammed with the mEDBG.

3. Document Revision History

Table 3-1 Document Revision History

Document revision	Date	Comment
42387B	08/2015	Slightly updated
42387A	02/2015	Initial document release

Atmel Enabling Unlimited Possibilities®

Atmel Corporation 1600 Technology Drive, San Jose, CA 95110 USA **T:** (+1)(408) 441.0311 **F:** (+1)(408) 436.4200 | **www.atmel.com**

© 2015 Atmel Corporation. / Rev.: Atmel-42387B-SAMD10_Xplained_User_Guide_User Guide-05/2015

Atmel®, Atmel logo and combinations thereof, Enabling Unlimited Possibilities®, AVR®, QTouch®, and others are registered trademarks or trademarks of Atmel Corporation in U.S. and other countries. Other terms and product names may be trademarks of others.

DISCLAIMER: The information in this document is provided in connection with Atmel products. No license, express or implied, by estoppel or otherwise, to any intellectual property right is granted by this document or in connection with the sale of Atmel products. EXCEPT AS SET FORTH IN THE ATMEL TERMS AND CONDITIONS OF SALES LOCATED ON THE ATMEL WEBSITE, ATMEL ASSUMES NO LIABILITY WHATSOEVER AND DISCLAIMS ANY EXPRESS, IMPLIED OR STATUTORY WARRANTY RELATING TO ITS PRODUCTS INCLUDING, BUT NOT LIMITED TO, THE IMPLIED WARRANTY OF MERCHANTABILITY, FITNESS FOR A PARTICULAR PURPOSE, OR NON-INFRINGEMENT. IN NO EVENT SHALL ATMEL BE LIABLE FOR ANY DIRECT, INDIRECT, CONSEQUENTIAL, PUNITIVE, SPECIAL OR INCIDENTAL DAMAGES (INCLUDING, WITHOUT LIMITATION, DAMAGES FOR LOSS AND PROFITS, BUSINESS INTERRUPTION, OR LOSS OF INFORMATION) ARISING OUT OF THE USE OR INABILITY TO USE THIS DOCUMENT, EVEN IF ATMEL HAS BEEN ADVISED OF THE POSSIBILITY OF SUCH DAMAGES. Atmel makes no representations or warranties with respect to the accuracy or completeness of the contents of this document and reserves the right to make changes to specifications and products descriptions at any time without notice. Atmel does not make any commitment to update the information contained herein. Unless specifically provided otherwise, Atmel products are not suitable for, and shall not be used in, automotive applications. Atmel products are not intended, authorized, or warranted for use as components in applications intended to support or sustain life.

SAFETY-CRITICAL, MILITARY, AND AUTOMOTIVE APPLICATIONS DISCLAIMER: Atmel products are not designed for and will not be used in connection with any applications where the failure of such products would reasonably be expected to result in significant personal injury or death (“Safety-Critical Applications”) without an Atmel officer's specific written consent. Safety-Critical Applications include, without limitation, life support devices and systems, equipment or systems for the operation of nuclear facilities and weapons systems. Atmel products are not designed nor intended for use in military or aerospace applications or environments unless specifically designated by Atmel as military-grade. Atmel products are not designed nor intended for use in automotive applications unless specifically designated by Atmel as automotive-grade.