Dimensions are in millimeters

Shell size	PART NUMBER	PART NUMBER	A	B	C	D	E	F	G	H	I	J	K	L	M	øN
E	863010	863010ASP206	15.27	2.4	2.4	24.99	30.55	20.21	12.3	12.7	12.28	10.74	18.6	20.8	24	8
A	863011	863011ASP206	19.44	2.4	3.2	33.32	38.89	28.55	12.3	12.7	12.28	10.74	27	20.8	24	10
B	863012	863012ASP206	26.39	3.2	4.75	47.04	52.78	42.29	12.3	12.7	12.28	10.74	40.5	20.8	24	15
C	863013	863013ASP206	34.53	3.2	6.35	63.50	69.06	58.75	12.3	12.7	12.28	10.74	56.96	20.8	24	18
D	863014	863014ASP206	33.34	3.2	4.75	61.11	66.67	56.36	12.3	15.4	15.15	13.02	55.03	20.8	24	20.6
	packaging : 100 pieces	packaging : 1 piece														

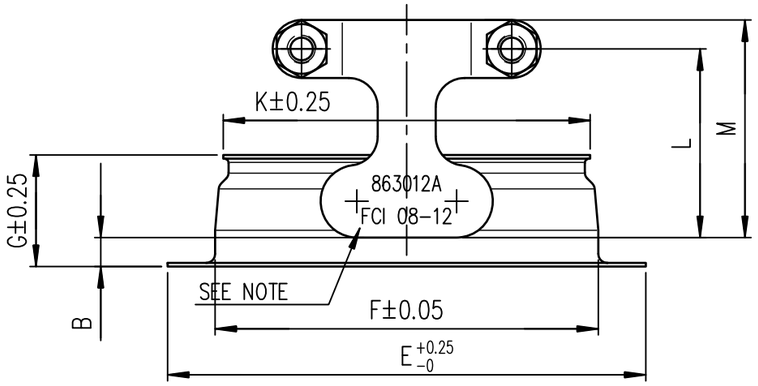

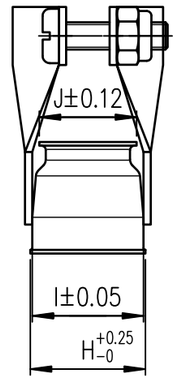

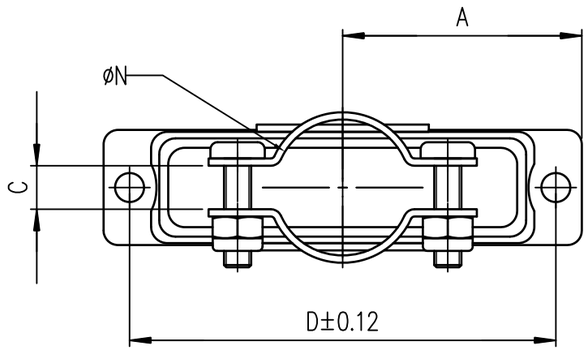

NOTES

- MATERIAL : STEEL
- PLATING : YELLOW CHROMATE CADIUM
- CORROSION RESISTANCE : 50 HOURS EXPOSURE TO SALT SPRAY
- MARKING FOR PART NUMBERS WITH SP206 :
  - MARKING ON THE HOOD -FCI PART NUMBER WITHOUT SP206 +FCI, WEEK AND YEAR CODE
  - MARKING ON THE LABEL -FCI PART NUMBER + WEEK AND YEAR CODE

SEE TABLE

mat'l. code SEE.NOTES				surface ISO 1302	tolerance ISO 406 ISO 1101	projection	product family D-SUB
ltr	ecn no	dr	date	tolerances unless otherwise specified			title
B	-	JAR	2003/03/13	angles	linear O.X ±0.1	MM	METAL HOOD WITH CLAMP
C	LS06-0097	LGO	2006/06/28		O.XX ±0.1		STRAIGHT EXIT
D	LS08-0117	MPE	2008/04/29	X±2°	O.XXX±0.1	scale 1:5	
E	EXLXI-I-15204	AB	2013/07/11	dr ATC	1998/12/03	FCI	dwg no C01-8655-1522 sheet 1 of 1 size A3
				engr ALIAS.BABU	2013/07/11		
				chr MITHUN.PAUL	2013/07/11		
				appd BIJU.K.PAUL	2013/07/11		type CUSTOMER Drawing
sheet index	revision sheet	E 1					