NOTES:

1. MATERIALS AND FINISHES:
   - CUBE BODY - BRASS, TIN PLATING (.000200 THICK)
   - BODY - BRASS, GOLD PLATING (.000030 THICK)
   - MALE CONTACT - BeCu, GOLD PLATING (.000030 THICK)
   - INSULATORS (2) - PTFE

2. ELECTRICAL:
   - A. IMPEDANCE: 75 OHM
   - B. FREQUENCY RANGE: DC - 2 GHz
   - C. DIELECTRIC WITHSTANDING VOLTAGE: 1000 VRMS, MIN.

3. MECHANICAL:
   - A. DURABILTIY: 500 CYCLES MIN.
   - B. TEMERATURE RANGE: 65° C TO 165° C

4. PACKAGING:
   - A. QUANTITY: SINGLE PACK
   - B. MARKING: BAG TO BE MARKED "AMPHENOL, 903-601J-71P, AND DATE CODE"

903-601J-71P	REVISIONS				
DRAWING NO.	REV	DESCRIPTION	DATE	ECO	APPR
THIRD ANGLE PROJ.	A	RELEASE TO MFG.	3/29/01	43711	CPM
	B	ADDED RECOMMENDED PCB LAYOUT	2/4/05	45292	KJC

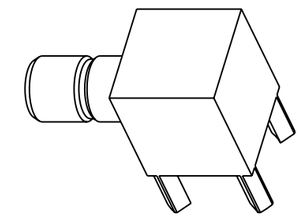

SCALE 3.000

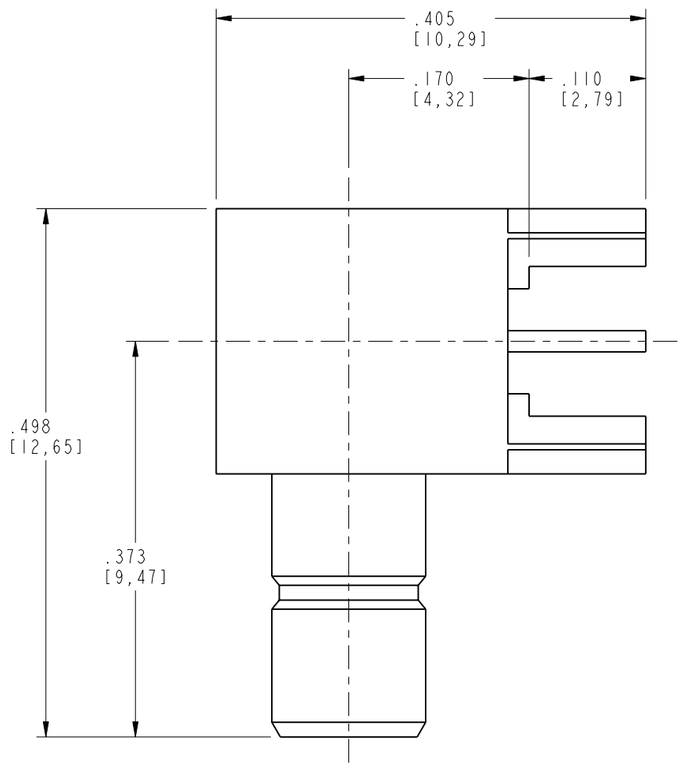

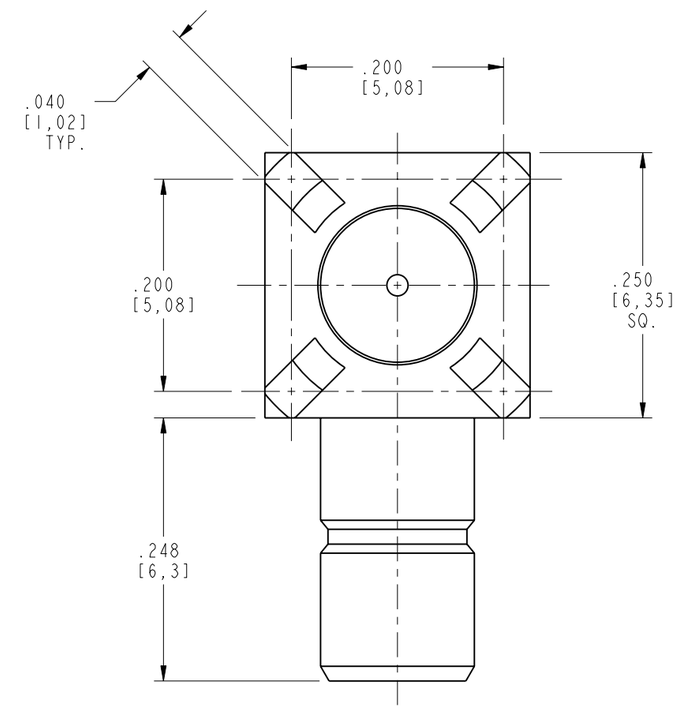

RECOMMENDED PCB MOUNTING HOLES

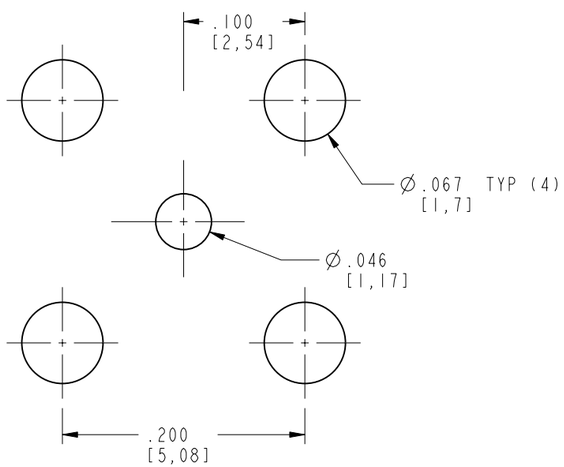

SCALE 8.000

CUSTOMER OUTLINE DRAWING

ALL OTHER SHEETS ARE FOR INTERNAL USE ONLY

UNLESS OTHERWISE SPECIFIED, DIMENSIONS ARE IN INCHES AND TOLERANCES ARE:
2 PLACE DECIMAL ±.015 (0,381 mm) | 3 PLACE DECIMAL ±.005 (0,127 mm) | ANGLES ± 1°

NOTICE - These drawings, specifications, or other data (1) are, and remain the property of Amphenol Corp. (2) must be returned upon request; and (3) are confidential and not to be disclosed to any person other than those to whom they are given by Amphenol Corp. The furnishing of these drawings, specifications, or other data by Amphenol Corp., or to any other person to anyone for any purpose is not to be regarded by implication or otherwise in any manner licensing, granting rights or permitting such holder or any other person to manufacture, use or sell any product, process or design, patented or otherwise, that may in any way be related to or disclosed by said drawings, specifications, or other data.

MATERIAL

REFERENCE
EAR 164
GEN# ASSYF15_SMB
615X-1638-100

DRAWN: C. McGRATH	DATE: 13-Mar-01	
ENGINEER: O. BARTHELMES	DATE: 13-Mar-01	
APPROVED: O. BARTHELMES	DATE: 3/28/01	
CAD FILE: I:\SMB\903-601J-71P		

TITLE
MINI-75 OHM SMB
RIGHT ANGLE JACK
PC MOUNT

Amphenol RF
Danbury, CT, USA
Tainan, Taiwan
Shenzhen, China
www.amphenolrf.com

SCALE: 7.0:1 | SHEET 2 OF 2

CODE ID	DWG SIZE	DRAWING NO.	REV
74868	B	903-601J-71P	B