NOTES:
1. MATERIALS AND FINISHES:
   BODY - BRASS, GOLD PLATING, .000030 [0.8] THICK OVER COPPER
   CONTACT - GOLD, GOLD PLATING, .000030 [0.8] THICK OVER COPPER
   INSULATOR - PEEK OR LCP
2. ELECTRICAL:
   A. IMPEDANCE: 50 OHM
   B. FREQUENCY RANGE: DC - 12 GHz
   C. VSWR(RETURN LOSS): 1.10 (26 dB), MAX. DC-6GHz
      1.20 (21 dB), MAX. 6-12GHz
   D. DIELECTRIC WITHSTANDING VOLTAGE: 500 VRMS, MIN.
3. PHYSICAL:
   A. DURABILTIY: 500 CYCLES MIN.
   B. ENGAGEMENT FORCE: 10 LB [45 N] MAX
   C. DISENGAGEMENT FORCE: 2 LB [9 N] MIN
   D. INNER CONTACT RETENTION FORCE: 1.5 LB [7 N] MIN
   E. TEMERATURE RANGE: -65° C TO 165° C
   F. INSULATOR MATERIAL RATED TO UL94 V-0
4. PACKAGING:
   A. QUANTITY: SINGLE PACK
   B. MARKING: AMPHENOL, SMP-MSLD-PCR, DATE CODE

SMP-MSLD-PCR	REVISIONS				
DRAWING NO.	REV	DESCRIPTION	DATE	ECO	APPR
THIRD ANGLE PROJ.	A	RELEASE TO MFG.	9/12/05	45722	MY
	E	ADDED UL RATING FOR INSULATOR MATERIAL	7/9/09	47682	TRC

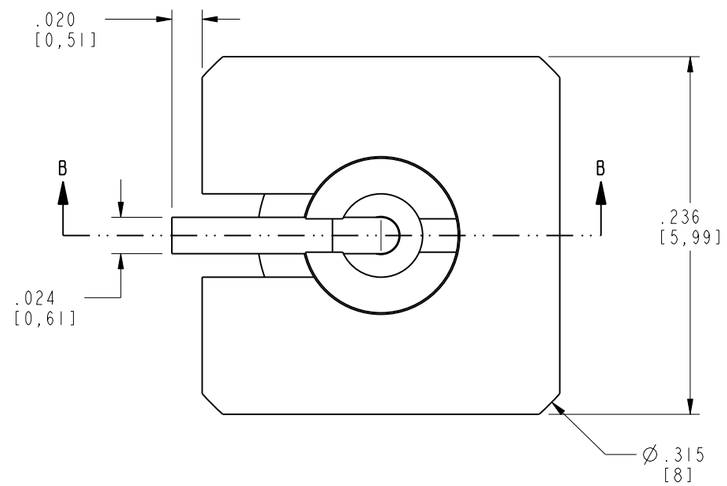

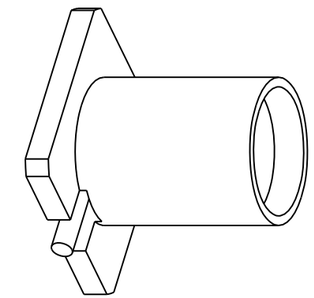

SCALE 6.000

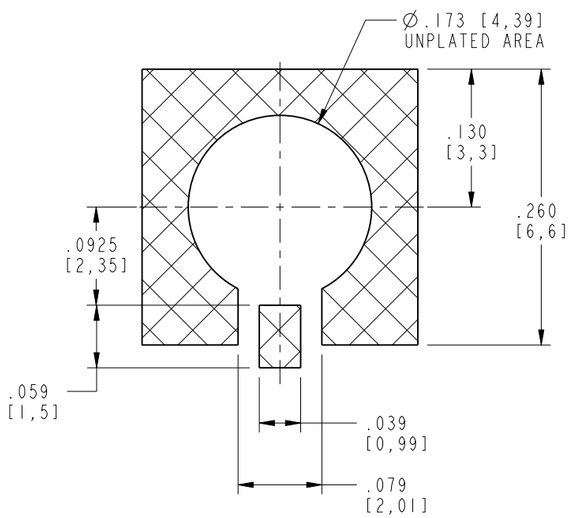

RECOMMENDED PCB PAD LAYOUT
SCALE 7.000

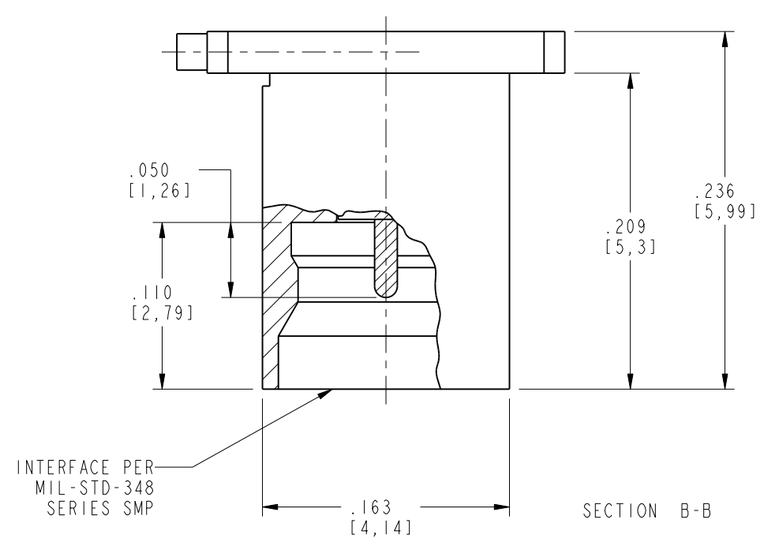

SECTION B-B

CUSTOMER OUTLINE DRAWING
ALL OTHER SHEETS ARE FOR INTERNAL USE ONLY

UNLESS OTHERWISE SPECIFIED, DIMENSIONS ARE IN INCHES AND TOLERANCES ARE:
2 PLACE DECIMAL ±.015 (0,381 mm) 3 PLACE DECIMAL ±.005 (0,127 mm) ANGLES ± 1°

NOTICE - These drawings, specifications, or other data (1) are, and remain the property of Amphenol Corp. (2) must be returned upon request; and (3) are confidential and not to be disclosed to any person other than those to whom they are given by Amphenol Corp. The furnishing of these drawings, specifications, or other data by Amphenol Corp., or to any other person to anyone for any purpose is not to be regarded by implication or otherwise in any manner licensing, granting rights or permitting such holder or any other person to manufacture, use or sell any product, process or design, patented or otherwise, that may in any way be related to or disclosed by said drawings, specifications, or other data.

MATERIAL

REFERENCE
GEN# ASSYM2_SMP
EAR# 283
615X-1690-100

DRAWN	DATE
MIKE HOYACK	02-Oct-01
ENGINEER	DATE
OWEN BARTHELMES	25-Apr-01
APPROVED	DATE
OWEN BARTHELMES	9/12/05

CAD FILE
I:\SMP\SMP-MSLD-PCR

TITLE
ASSEMBLY
PC BOARD, REAR MOUNT
LIMITED DETENT

Amphenol RF
Danbury, CT, USA
Tainan, Taiwan
Shenzhen, China
www.amphenolrf.com

SCALE: 10.0:1 | SHEET 2 OF 2

CODE ID	DWG SIZE	DRAWING NO.	REV
74868	B	SMP-MSLD-PCR	E