NOTES:
1. MATERIALS AND FINISHES:
   BODY - BRASS, GOLD PLATING, .000030 [0.8] THICK OVER COPPER
   CONTACT - BRASS, GOLD PLATING, .000030 [0.8] THICK OVER COPPER
   INSULATOR - PEEK OR LCP
2. ELECTRICAL:
   A. IMPEDANCE: 50 OHM
   B. FREQUENCY RANGE: DC - 6 GHz
   C. VSWR(RETURN LOSS): 1.10 (26.4 dB), MAX. DC-2GHz
      1.22 (20 dB), MAX. 2-6GHz
   D. DIELECTRIC WITHSTANDING VOLTAGE: 500 VRMS, MIN.
3. PHYSICAL:
   A. DURABILTIY: 500 CYCLES MIN.
   B. ENGAGEMENT FORCE: 2 LB [9 N] MAX
   C. DISINGAGEMENT FORCE: .5 LB [2.2 N] MIN
   D. INNER CONTACT RETENTION FORCE: 1.5 LB [7 N] MIN
   E. TEMERATURE RANGE: -65° C TO 165° C
4. PACKAGING:
   A. QUANTITY: SINGLE PACK
   B. MARKING:
      AMPHENOL
      SMP-MSLD-PCT
      DATE CODE
      QTY

SMP-MSLD-PCT	REVISIONS				
DRAWING NO.	REV	DESCRIPTION	DATE	ECO	APPR
FIRST ANGLE PROJ.	A	RELEASE TO MFG.	3/2/05	45425	MAH

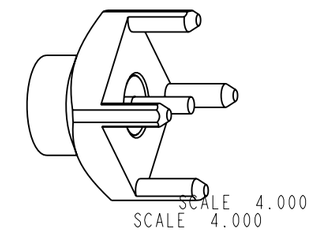

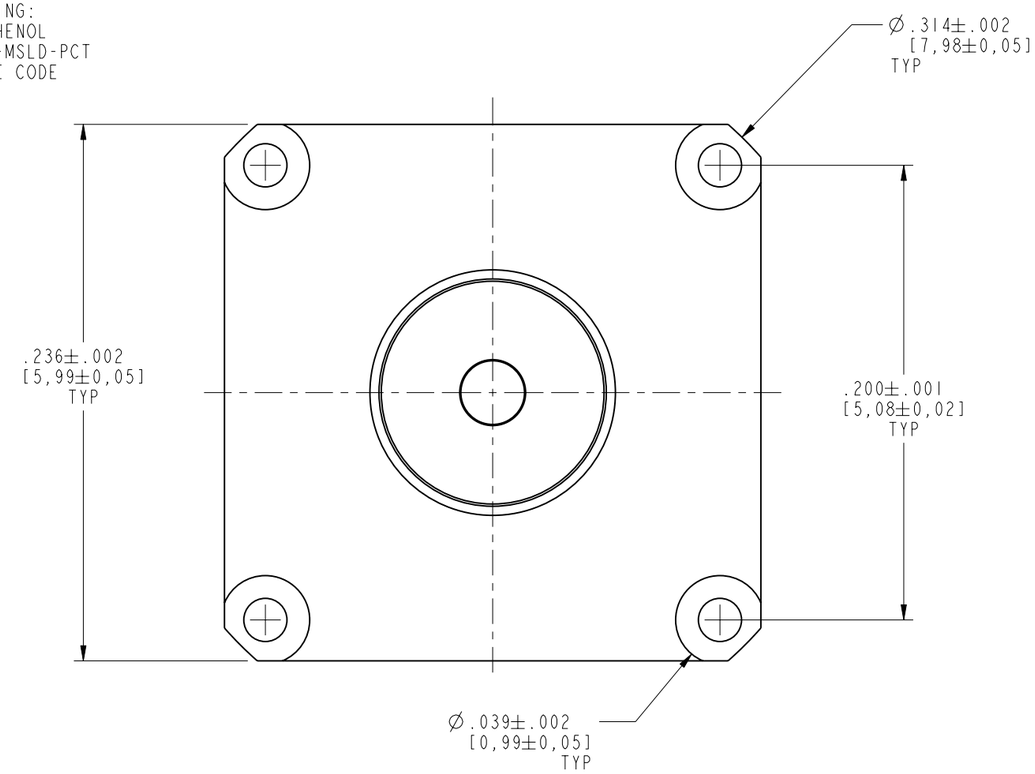

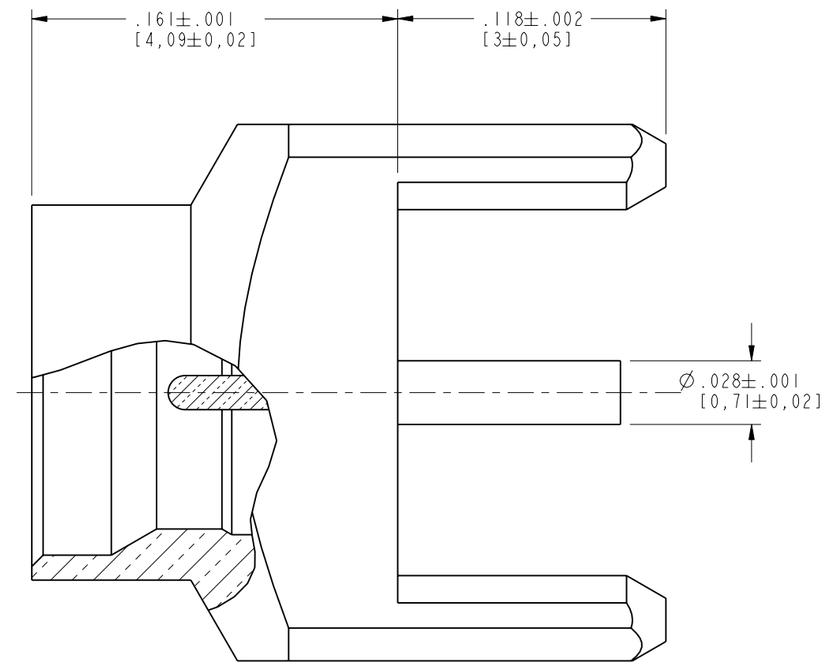

SECTION B-B

CUSTOMER OUTLINE DRAWING
ALL OTHER SHEETS ARE FOR INTERNAL USE ONLY

UNLESS OTHERWISE SPECIFIED, DIMENSIONS ARE IN INCHES AND TOLERANCES ARE:
2 PLACE DECIMAL ±.015 (0,381 mm) | 3 PLACE DECIMAL ±.005 (0,127 mm) | ANGLES ± 1°

NOTICE - These drawings, specifications, or other data (1) are, and remain the property of Amphenol Corp. (2) must be returned upon request; and (3) are confidential and not to be disclosed to any person other than those to whom they are given by Amphenol Corp. The furnishing of these drawings, specifications, or other data by Amphenol Corp., or to any other person to anyone for any purpose is not to be regarded by implication or otherwise in any manner licensing, granting rights or permitting such holder or any other person to manufacture, use or sell any product, process or design, patented or otherwise, that may in any way be related to or disclosed by said drawings, specifications, or other data.

MATERIAL

REFERENCE
EAR# 1531
GEN# ASSYM4_SMP
615X-1732
PREVIOUSLY SMP-MSLD-PCT-2

DRAWN K. CAPOZZI	DATE 9/21/04	
ENGINEER K. CAPOZZI	DATE 9/21/04	
APPROVED O. BARTHELMES	DATE 3/2/05	
CAD FILE SMP-MSLD-PCT	CODE ID 74868	DWG SIZE B

TITLE
SMP MALE, PIN CONTACT
PCB RECEPTACLE
LIMITED DETENT

Amphenol
Amphenol Corporation
Communication and Network
Products Division
Danbury, CT U.S.A. 06810

SCALE: 15.0:1 | SHEET 2 OF 2

DRAWING NO. SMP-MSLD-PCT | REV A