THIRD ANGLE PROJ.

REVISIONS				
REV	DESCRIPTION	DATE	ECO	APPR
A	RELEASE TO MFG.	25-Mar-13	48952	TD
B	ADDED ARC LOGO TO REAR BODY & AMPHENOL RF TO HST \RD-DMI3082201J8	30-Aug-13	49619	RLB

NOTES:

1. MATERIALS AND FINISHES:
   - BODY, REAR BODY - BRASS, NICKEL PLATING
   - CONTACT - BRASS, GOLD PLATING
   - INSULATOR - PTFE
   - INSULATOR REAR - ULTEM
   - HEX NUT - BRASS, NICKEL PLATING
   - LOCK WASHER - BRASS, NICKEL PLATING
   - CAP - BRASS, NICKEL PLATING
   - GASKET, O-RING - SILICONE RUBBER
   - FERRULE - SEAMLESS COPPER TUBE, NICKEL PLATING
   - HEAT SHRINK TUBING - CROSSLINKED POLYOLEFIN
2. ELECTRICAL:
   - A. IMPEDANCE: 50 OHM
   - B. FREQUENCY RANGE: DC - 6 GHz
   - C. DIELECTRIC WITHSTANDING VOLTAGE: 1000 VRMS, MIN.
3. MECHANICAL:
   - A. DURABILITY: 500 CYCLES MIN.
   - B. TEMPERATURE RANGE: -40° C TO +85° C
4. PACKAGING:
   - A. QUANTITY: SINGLE PACK
   - B. MARKING: MARK BAG OR TAG "AMPHENOL RF, 31-6510, AND DATE CODE"

5 RECOMMENDED CABLE ASSEMBLY INSTRUCTIONS:
   - A. TRIM CABLE AS SHOWN.
   - B. SLIDE HEAT SHRINK TUBING, FERRULE AND INSULATOR REAR ONTO CABLE.
   - C. INSERT CABLE WITH FOIL ENTERING CONNECTOR AND BRAID OVER KNURL.
   - D. SOLDER CABLE CENTER CONDUCTOR TO CONTACT.
   - E. CRIMP FERRULE OVER BRAID WITH 0.213" HEX DIE.
   - F. APPLY HEAT SHRINK TUBING OVER FERRULE.
   - G. HEAT SHRINK TUBING SHOULD FULLY (360 DEG) COVER THE BUMP ON BODY AND END WITHIN AREA "A"

6. CAP ASSEMBLY INSTRUCTIONS:
   - A. PLACE O-RING ON CAP AS SHOWN.
   - B. ASSEMBLE CAP TO BODY WITH 6-10 IN-LBS TORQUE.

7 RECOMMENDED TORQUE APPLIED ON HEX NUT: 7-10 IN-LBS.

8 SHOWS CABLE ENTRY DIMENSIONS.

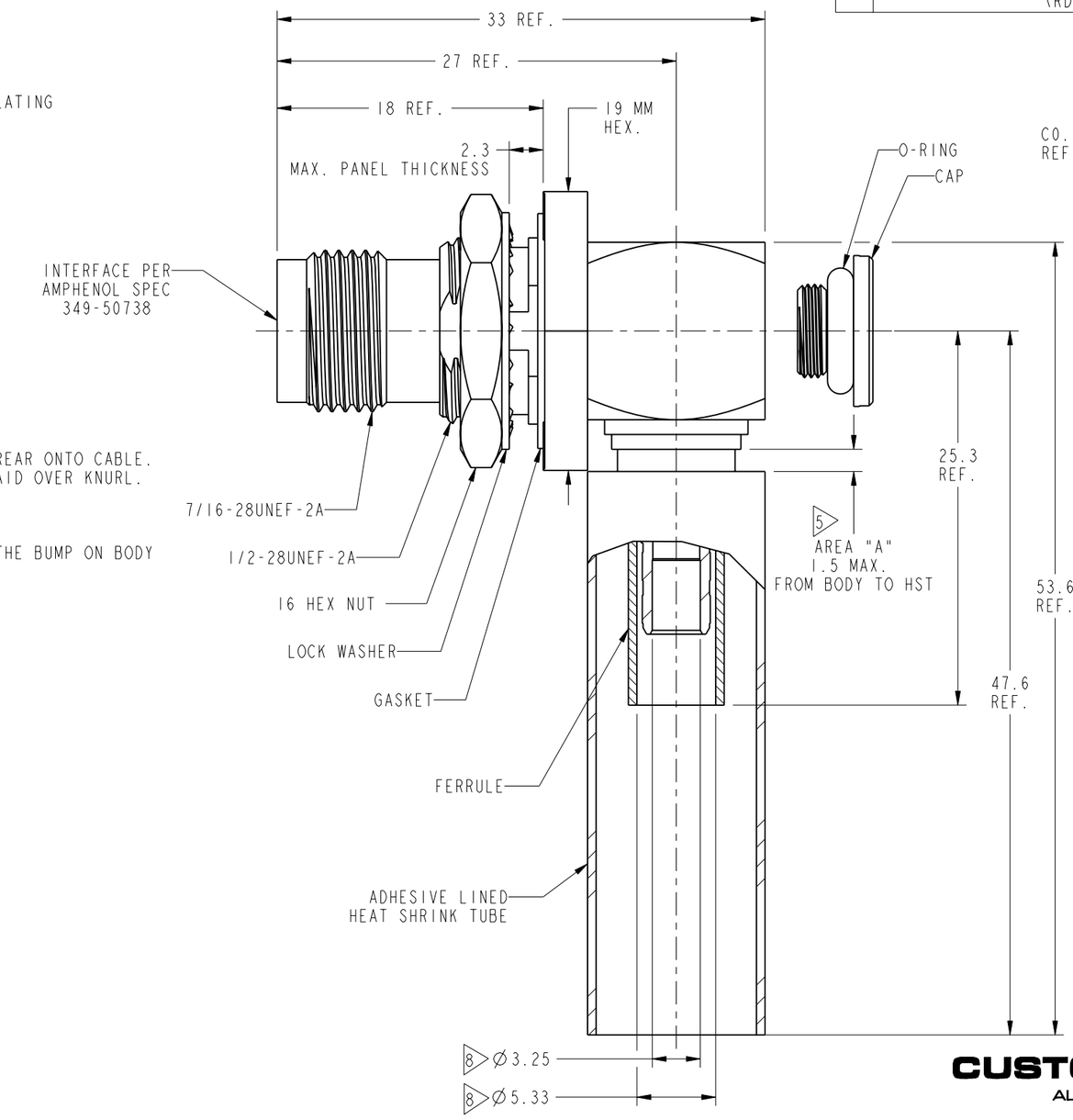

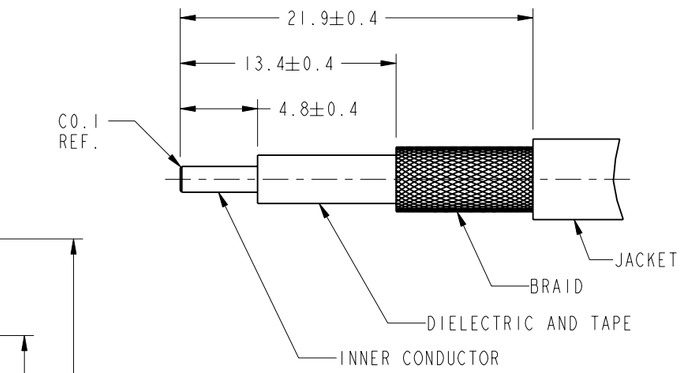

RECOMMENDED CABLE STRIPPING DIMENSIONS

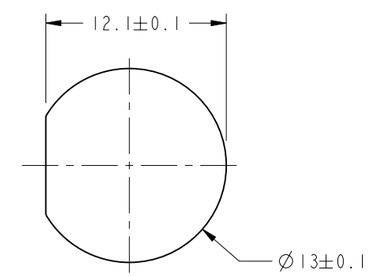

RECOMMENDED MOUNTING HOLE DIMENSIONS

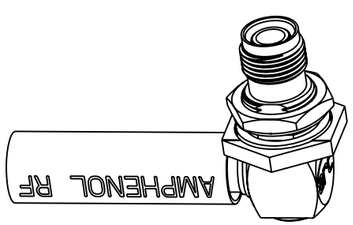

SCALE 1.000

CUSTOMER OUTLINE DRAWING

ALL OTHER SHEETS ARE FOR INTERNAL USE ONLY

UNLESS OTHERWISE SPECIFIED, DIMENSIONS ARE IN METRIC AND TOLERANCES ARE:

<0.5mm	0.5 - 6mm	6 - 30mm	30 - 120mm	ANGLES
± 0.05mm	±0.1mm	±0.2mm	± 0.3mm	±1°

NOTICE - These drawings, specifications, or other data (1) are, and remain the property of Amphenol corp. (2) must be returned upon requiest; and (3) arre confidential and not to be disclosed to any person other than those to whom they are given by Amphenol Corp. the funishing of these drawings, specifications, or other data by Amphenol Corp., or to any other person to anyone for any purpose is not to be regarded by implicatioin or otherwise in any manner licensing, granting rights to permitting such holder or any other sperson to manufacture, use or sell any product, process or design, patented or otherwsie, that may in any way be related to or disclosed by said drawings, specifications, or other data.

MATERIAL: SEE NOTES	DRAWN J.CHEN	DATE 30-Aug-13	TITLE: TNC R/A RP BHD JACK IP-67 FOR LMR 200 CABLE
	ENGINEER BALAJI M	DATE 22-Mar-13	
REFERENCE	APPROVED S.HSIEH	DATE 04-Sep-13	SCALE: 2.7:1.0 SHEET 2 OF 2
CONFIGURATION LEVEL:	CAD FILE		DWG SIZE B / REV B
FINISH			

Amphenol RF

www.amphenolrf.com

DRAWING NO. 31-6510

ITEM NO. 31-6510

PART NO. 31-6510