REV.	DATE	DESCRIPTION
A	05/01/04	UPDATE DRAWING FORMAT
B	07/10/06	ADD CABLE CALLOUT TO PART DESCRIPTION

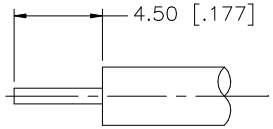

RECOMMENDED
CABLE STRIPPING DIM'S

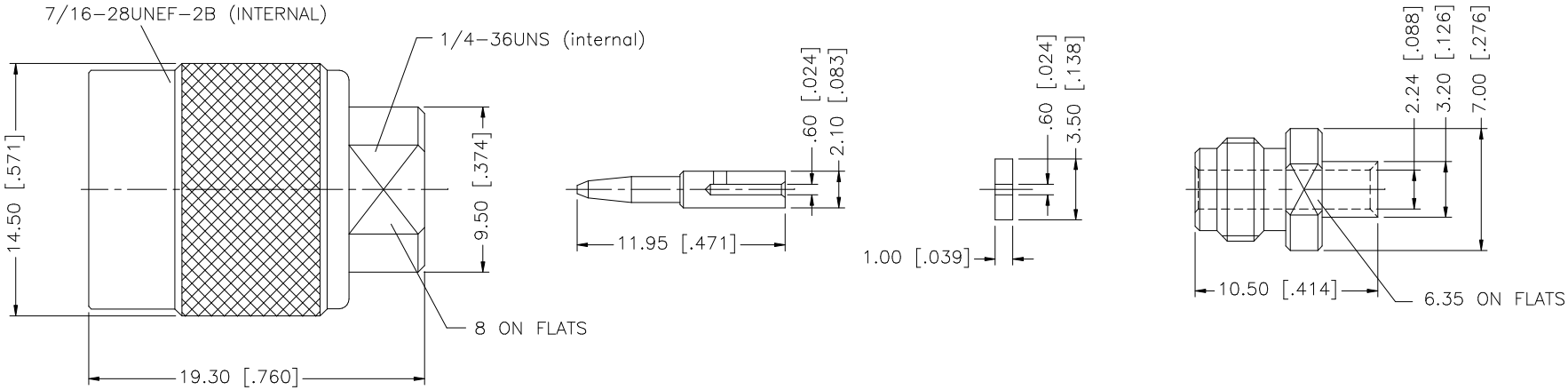

NOTE:

1. CRIMPED CONTACT PIN
   HEX CRIMP SIZE .068"

	DESCRIPTION	MATERIAL	FINISH	QTY
8				
7				
6				
5	SOLDER NUT	BRASS	GOLD	1
4	INSULATOR	TEFLON	NATURAL	1
3	CONTACT PIN	BRASS	GOLD	1
2	INSULATOR	TEFLON	NATURAL	1
1	BODY	BRASS	GOLD	1

UNLESS OTHERWISE SPECIFIED DIMENSIONS ARE IN MILLIMETERS. DIMENSIONS IN [ ] ARE IN INCHES AND FOR CUSTOMER REFERANCE ONLY.

UNLESS OTHERWISE SPECIFIED TOLERANCES FOR MILLIMETERS ARE:
0.5 – 8mm ± 0.20mm
8 – 30mm ± 0.40mm
30 – 120mm ± 0.50mm

UNLESS OTHERWISE SPECIFIED TOLERANCES FOR INCHES ARE:
.020 – .315 = ± 0.007"
.315 – 1.180 = ± 0.015"
1.180 – 4.724 = ± 0.020"

DO NOT SCALE DRAWING

APPROVALS		DATE
DRAWN	G.R.S.	07/10/06
CHECKED		
ISSUED		
SHEET	1 OF 1	

CAD FILE C:/122/122387.DWG

Amphenol Connex

PART DESCRIPTION
TNC DIRECT SOLDER PLUG
(FOR .085" SEMI RIGID CABLE)

PART NO. 122387

DWG. NO. 122387.DWG | REV. B | SIZE A | SCALE NA