REV.	DATE	DESCRIPTION
NC	08/05/99	INITIAL RELEASE

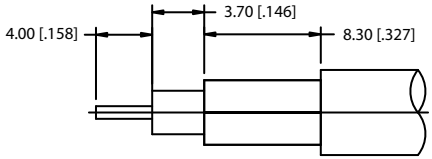

RECOMMENDED
CABLE STRIPPING DIM'S

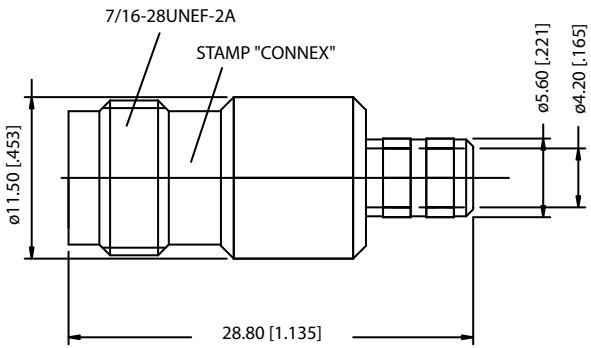

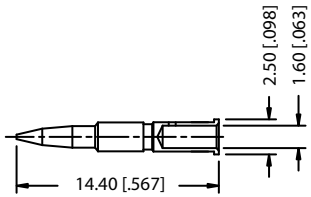

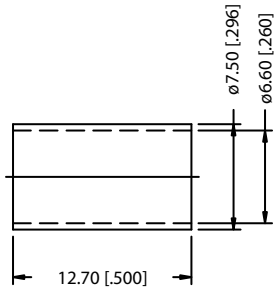

	DESCRIPTION	MATERIAL	FINISH
1	BODY	BRASS	NICKEL
2	INSULATOR	TEFLON	NATURAL
3	CONTACT PIN	PHOS. BRONZE	GOLD
4	FERRULE	COPPER	NICKEL
5			
6			
7			
8			

UNLESS OTHERWISE SPECIFIED
DIMENSIONS ARE IN MILLIMETERS

DIMENSIONS IN [ ] ARE IN INCHES
FOR CUSTOMER REFERANCE ONLY

UNLESS OTHERWISE SPECIFIED
TOLERANCES FOR MILLIMETERS ARE:

0.5-6 = ± 0.2
6-30 = ± 0.4
30-120 = ± 0.6
120-315 = ± 1
315-1000 = ± 1.6
1000-2000 = ± 2.4

DO NOT SCALE DRAWING

APPROVALS		DATE
DRAWN	G.R.S.	08/05/99
CHECKED		
ISSUED		

Connex Connector Corporation

TITLE: TNC CRIMP JACK - REVERSE POLARIZED (FOR RG-8X, TIMES LMR-240 CABLE)

SIZE	FSCM NO.	DWG. NO.	REV.
A	99001	122409RP.DWG	NC

SCALE	PART NO.	SHEET
NA	122409RP	1 OF 1