NOTES:

1. MATERIALS AND FINISHES:
   BODY - BRASS, NICKEL PLATING
   CONTACT - BRASS, GOLD PLATING
   INSULATOR - PTFE, NATURAL
   COUPLING NUT - BRASS, NICKEL PLATING
   RETAINING RING - STAINLESS STEEL, NATURAL

2. ELECTRICAL:
   A. IMPEDANCE: 75 OHM
   B. FREQUENCY RANGE: DC-12 GHz
   C. VSWR(RETURN LOSS):-20 dB DC-2 GHz MAX.
   -15 dB 2-6 GHz MAX.
   D. DIELECTRIC WITHSTANDING VOLTAGE: 250 VRMS, MIN.

3. MECHANICAL:
   A. DURABILITY: 500 CYCLES MIN.
   B. TEMPERATURE RANGE: -40° C TO 155° C

4. PACKAGING:
   A. QUANTITY: SINGLE PACK
   B. MARKING: PACKAGING TO BE MARKED
   "AMPHENOL RF, AD-NP1023J-P, AND DATE CODE"

THIRD ANGLE PROJ.

REVISIONS				
REV	DESCRIPTION	DATE	ECN	APPR
A	RELEASE TO MANUFACTURING	28-Oct-19	13462	CJV

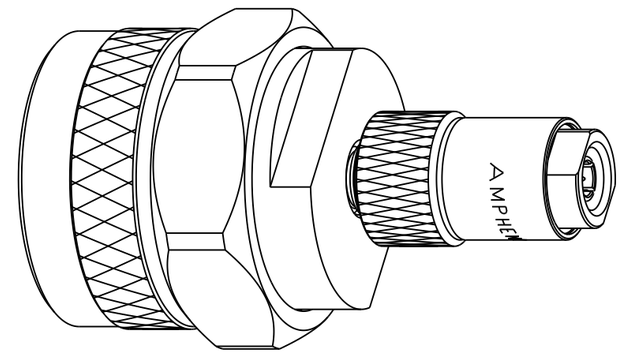

SCALE 2.500

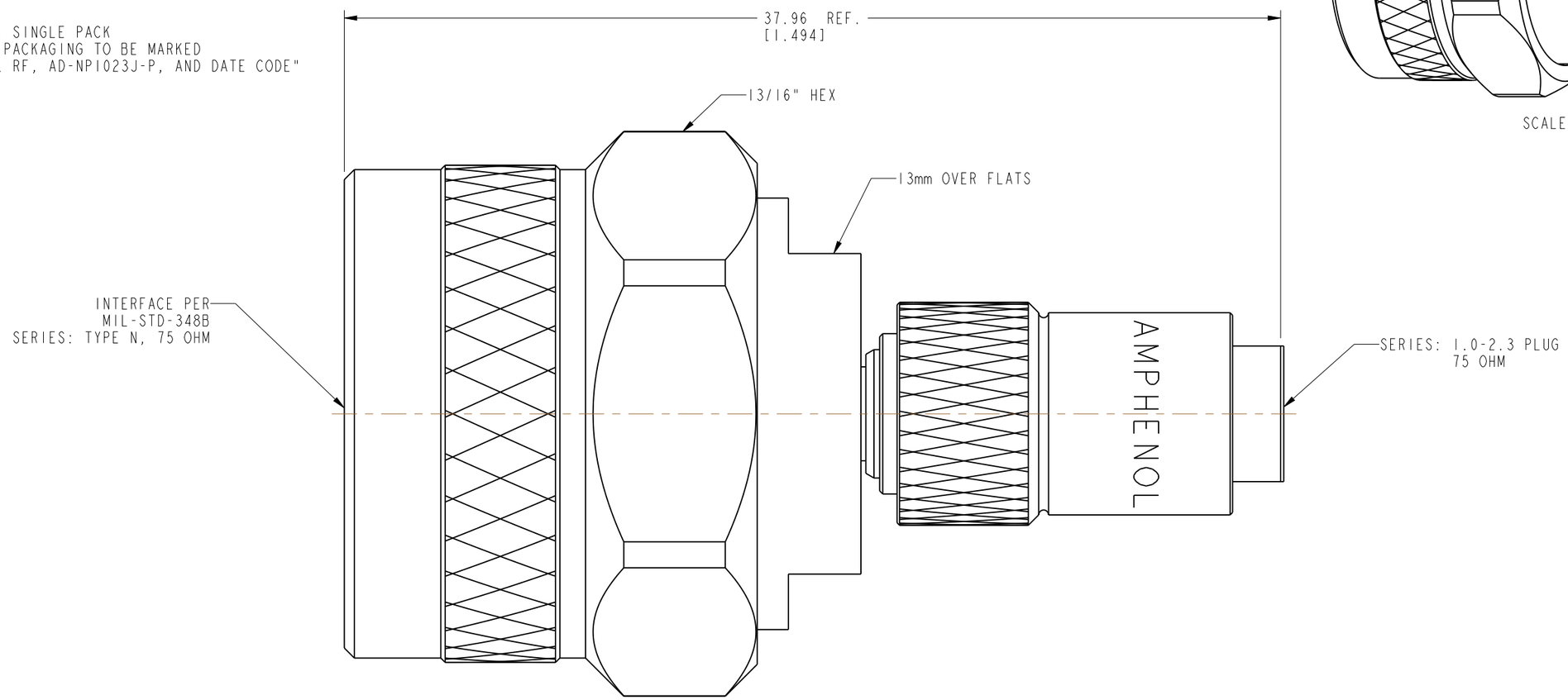

CUSTOMER OUTLINE DRAWING

ALL OTHER SHEETS ARE FOR INTERNAL USE ONLY

UNLESS OTHERWISE SPECIFIED, DIMENSIONS ARE IN METRIC AND TOLERANCES ARE:

<0.5mm	0.5 - 6mm	6 - 30mm	30 - 120mm	ANGLES
± 0.05mm	±0.1mm	±0.2mm	± 0.3mm	±1°

NOTICE - These drawings, specifications, or other data (1) are, and remain the property of Amphenol corp. (2) must be returned upon request; and (3) are confidential and not to be disclosed to any person other than those to whom they are given by Amphenol Corp. the furnishing of these drawings, specifications, or other data by Amphenol Corp., or to any other person to anyone for any purpose is not to be regarded by implication or otherwise in any manner licensing, granting rights to permitting such holder or any other person to manufacture, use or sell any product, process or design, patented or otherwise, that may in any way be related to or disclosed by said drawings, specifications, or other data.

MATERIAL	DRAWN	DATE
SEE NOTES	C. VIGORITO	21-Jun-19
REFERENCE	ENGINEER	DATE
EAR# 8729	C. VIGORITO	21-Jun-19
REF: ---	APPROVED	DATE
CONFIGURATION LEVEL: In Work	K. CAPOZZI	28-Oct-19
FINISH	CAD FILE	

TITLE
ADAPTER
N PLUG TO 1.0-2.3 PLUG
75 OHM

SCALE: 5.0:1.0 | SHEET 2 OF 2

DWG SIZE	REV
B	A

Amphenol RF

www.amphenolrf.com

DRAWING NO.	AD-NP1023P-1
ITEM NO.	AD-NP1023P-1
PART NO.	AD-NP1023P-1