NOTES:

1. MATERIALS AND FINISHES:
   HEX NUT - STAINLESS STEEL, NICKEL PLATING
   LOCK WASHER - PHOSPHOR BRONZE, NICKEL PLATING
   SMA BODY - BRASS, GOLD PLATING
   AMC4 BODY - STAINLESS STEEL, PASSIVATED
   CONTACT - BERYLLIUM COPPER, GOLD PLATING
   INSULATOR - PTFE, NATURAL

2. ELECTRICAL:
   A. IMPEDANCE: 50 OHM
   B. FREQUENCY RANGE: DC-6 GHz
   C. VSWR(RETURN LOSS): 1.3 MAX @ DC-3 GHz
      1.4 MAX @ 3-6 GHz
   D. DIELECTRIC WITHSTANDING VOLTAGE: 100 VRMS, MIN.

3. MECHANICAL:
   A. DURABILITY: 100 CYCLES MIN.
   B. TEMPERATURE RANGE: -65°C TO +165°C

4. MAX. PANEL THICKNESS = 3.18 MM

5. PACKAGING:
   A. QUANTITY: SINGLE PACK
   B. MARKING: PACKAGING TO BE MARKED
      "AMPHENOL RF AD-SMAJAMC4J-1 YYWW"

THIRD ANGLE PROJ.

REVISIONS				
REV	DESCRIPTION	DATE	ECN	APPR
A	RELEASE TO MFG.	28-Jun-19	12046	EH

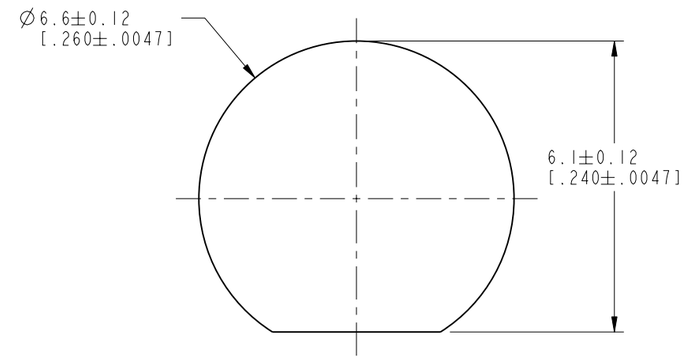

RECOMMENDED MOUNTING HOLE DIMENSIONS

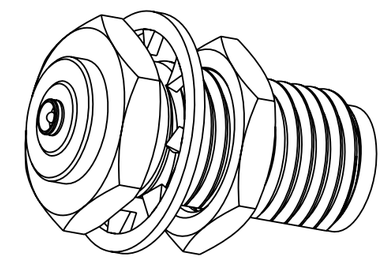

SCALE 4.000

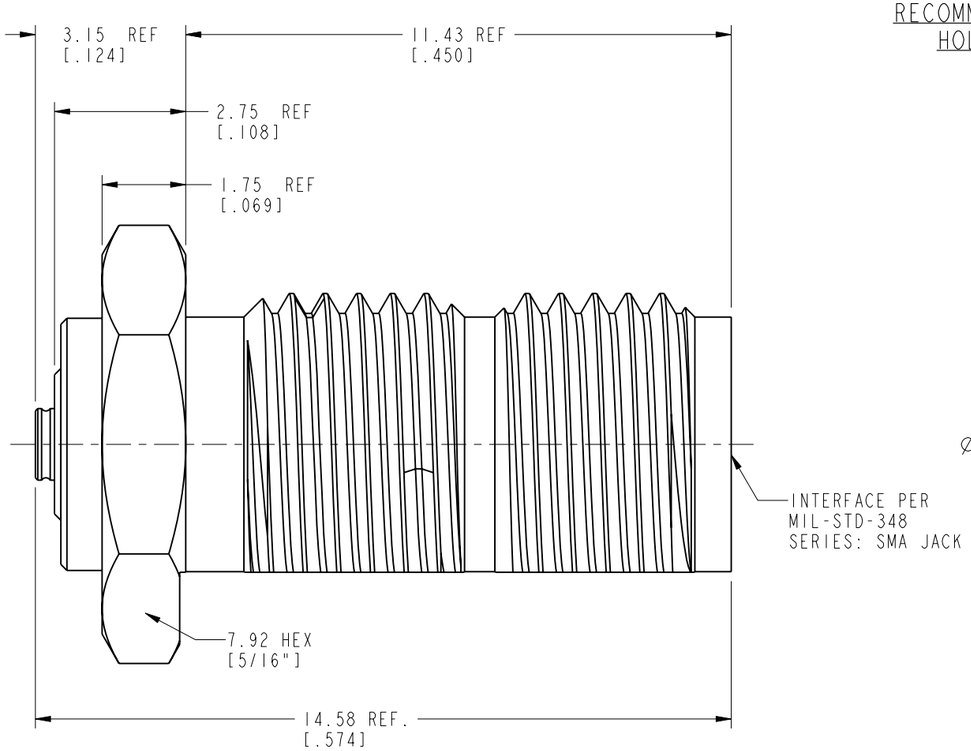

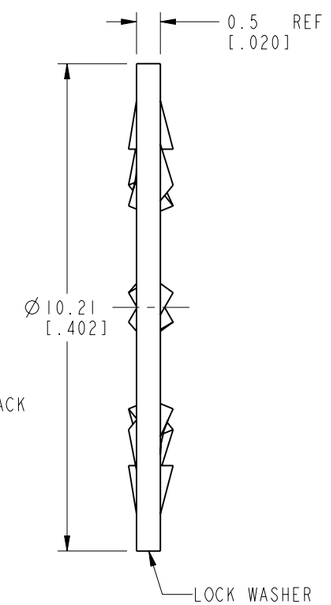

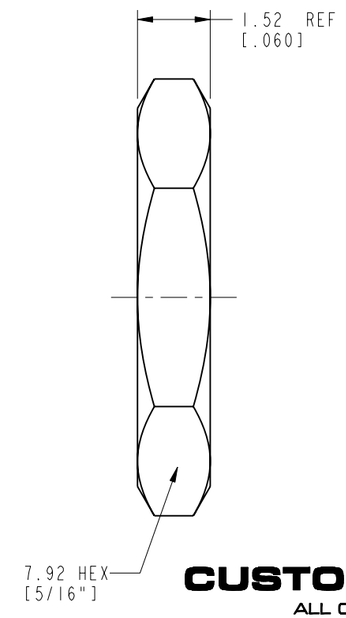

CUSTOMER OUTLINE DRAWING

ALL OTHER SHEETS ARE FOR INTERNAL USE ONLY

UNLESS OTHERWISE SPECIFIED, DIMENSIONS ARE IN METRIC AND TOLERANCES ARE:

<0.5mm	0.5 - 6mm	6 - 30mm	30 - 120mm	ANGLES
± 0.05mm	±0.1mm	±0.2mm	± 0.3mm	±1°

NOTICE - These drawings, specifications, or other data (1) are, and remain the property of Amphenol corp. (2) must be returned upon request; and (3) are confidential and not to be disclosed to any person other than those to whom they are given by Amphenol Corp. the furnishing of these drawings, specifications, or other data by Amphenol Corp., or to any other person to anyone for any purpose is not to be regarded by implication or otherwise in any manner licensing, granting rights to permitting such holder or any other person to manufacture, use or sell any product, process or design, patented or otherwise, that may in any way be related to or disclosed by said drawings, specifications, or other data.

MATERIAL
NOTE 1

REFERENCE
EAR# 8820
REF: 901-10175

CONFIGURATION LEVEL: In Work

FINISH

DRAWN	J.LUO	DATE 28-Jun-19
ENGINEER	S.DUAN	DATE 13-Feb-19
APPROVED	S.HSIEH	DATE 11-Jul-19
CAD FILE		

TITLE
SMA BULKHEAD JACK TO AMC4 JACK ADAPTER

SCALE: 8.0:1.0 | SHEET 2 OF 2

DWG SIZE: B | REV: A

Amphenol RF
www.amphenolrf.com

DRAWING NO. AD-SMAJAMC4J-1
ITEM NO. AD-SMAJAMC4J-1
PART NO. AD-SMAJAMC4J-1