NOTES:
1. MATERIALS AND FINISHES:
   BODY - BeCu, GOLD PLATING, .000030 [0.8] THICK OVER NICKEL
   CONTACT - BeCu, GOLD PLATING, .000030 [0.8] THICK OVER NICKEL
   INSULATOR - PTFE
2. ELECTRICAL:
   A. IMPEDANCE: 50 OHM
   B. FREQUENCY RANGE: DC - 26.5 GHz
   C. VSWR(RETURN LOSS): 1.2 (20.8 dB), MAX. DC-10GHz
   1.4 (15.6 dB), MAX. 10-18GHz
   1.5 (14 dB), MAX. 18-26.5GHz
   D. DIELECTRIC WITHSTANDING VOLTAGE: 500 VRMS, MIN.
3. PHYSICAL:
   A. DURABILTIY: 100 CYCLES MIN.
   B. ENGAGEMENT FORCE: 15 LB [67 N] MAX
   C. DISINGAGEMENT FORCE: 2 LB [9 N] MIN
   E. TEMERATURE RANGE: -65° C TO 165° C
4. PACKAGING:
   A. QUANTITY: SINGLE PACK
   B. MARKING: AMPHENOL, SMP-FR-C07, DATE CODE
5. SEE AMPHENOL SPEC 349-50687 FOR CABLE ASSEMBLY INSTRUCTIONS.

SMP-FR-C07	REVISIONS				
DRAWING NO.	REV	DESCRIPTION	DATE	ECO	APPR
THIRD ANGLE PROJ.	01	PROTOTYPE RELEASE	10/02/01		MAH

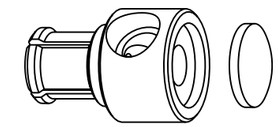

SCALE 4.000

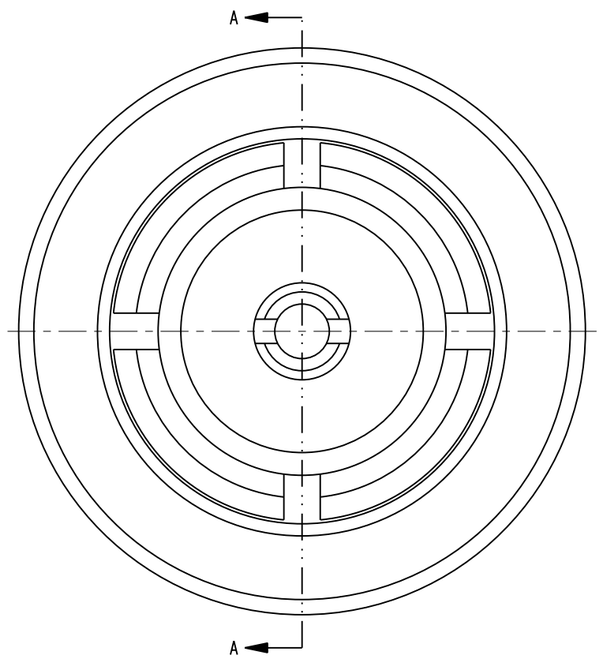

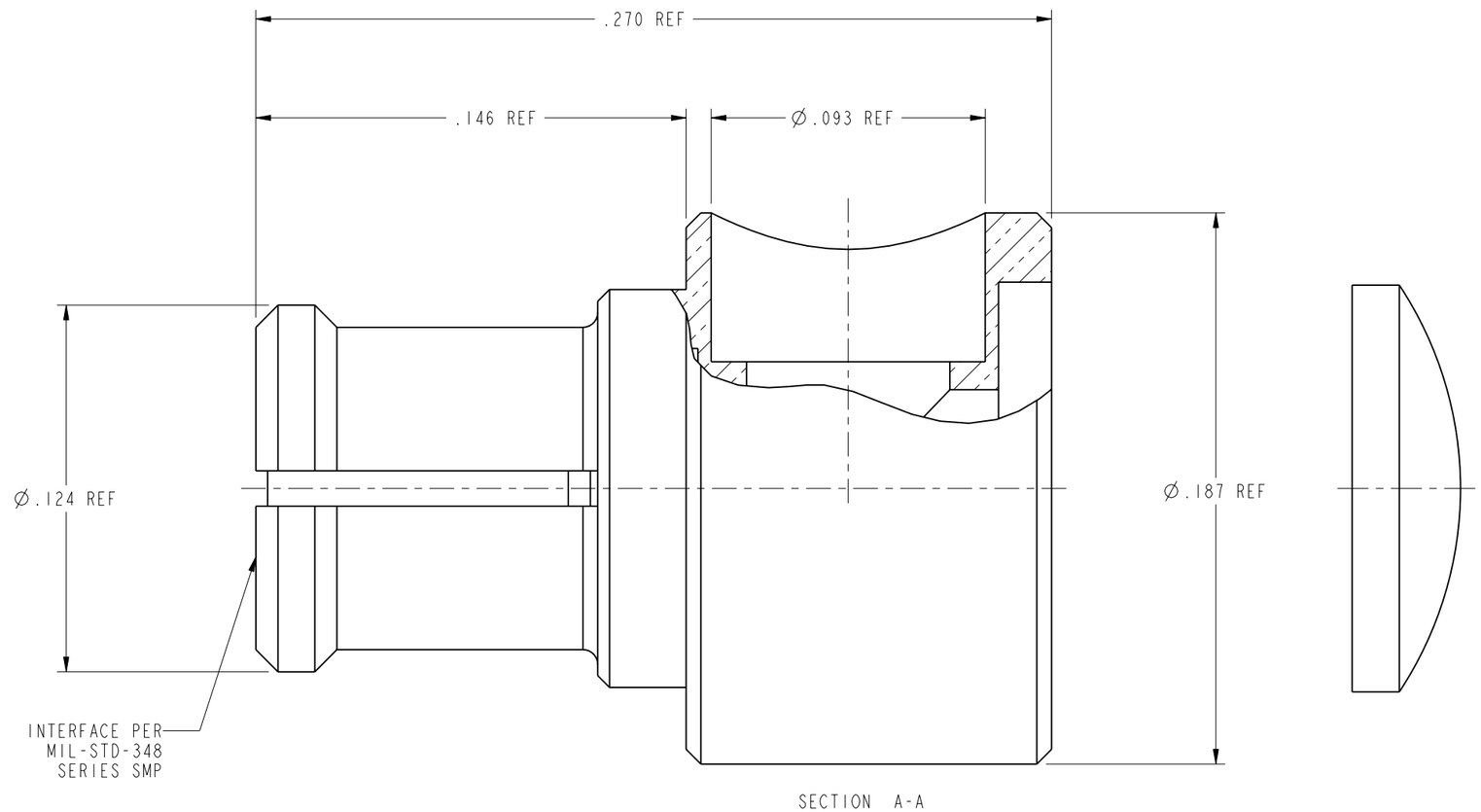

CUSTOMER OUTLINE DRAWING
ALL OTHER SHEETS ARE FOR INTERNAL USE ONLY

UNLESS OTHERWISE SPECIFIED, DIMENSIONS ARE IN INCHES AND TOLERANCES ARE:

2 PLACE DECIMAL	3 PLACE DECIMAL	ANGLES
±.015 (0,381 mm)	±.005 (0,127 mm)	± 1°

NOTICE - These drawings, specifications, or other data (1) are, and remain the property of Amphenol Corp. (2) must be returned upon request; and (3) are confidential and not to be disclosed to any person other than those to whom they are given by Amphenol Corp. The furnishing of these drawings, specifications, or other data by Amphenol Corp., or to any other person to anyone for any purpose is not to be regarded by implication or otherwise in any manner licensing, granting rights or permitting such holder or any other person to manufacture, use or sell any product, process or design, patented or otherwise, that may in any way be related to or disclosed by said drawings, specifications, or other data.

MATERIAL

REFERENCE
GEN# ASSYF3_SMP
EAR# 322
615X-1717

DRAWN	M. HOYACK	DATE 02-Oct-01
ENGINEER	G. ANTONINI	DATE 24-Jul-01
APPROVED		DATE

TITLE
SMP R/A FEMALE
SOCKET CONTACT
FOR .086 S.R. CABLE

Amphenol
Amphenol Corporation
Communication and Network
Products Division
Danbury, CT U.S.A. 06810

SCALE: 20.0:1 | SHEET 2 OF 2

CAD FILE	CODE ID	DWG SIZE	DRAWING NO.	REV
I:\SMP\SMP-FR-C07	74868	B	SMP-FR-C07	01