PART NAME	NEMA 4X ENCLOSURE	PART No.	PNR-2600, PNR-2600-C AND PNR-2600-DG PNR-2601, PNR-2601-C AND PNR-2601-DG

INDUSTRY STANDARDS:

POLYCARBONATE (LIGHT GRAY AND CLEAR)
- UL94V-2 FLAMMABILITY RATING (UL FILE #E41613)
- UV STABILIZED
- SERVICE TEMPERATURE RANGE: -40°C TO +120°C

ABS (DARK GRAY)
- UL94-HB FLAMMABILITY RATING (UL FILE #E56070)
- SERVICE TEMPERATURE RANGE: -40°C TO +80°C

NOTE: ALL DIMENSIONS HAVE ±0.015 TOLERANCE UNLESS OTHERWISE SPECIFIED.

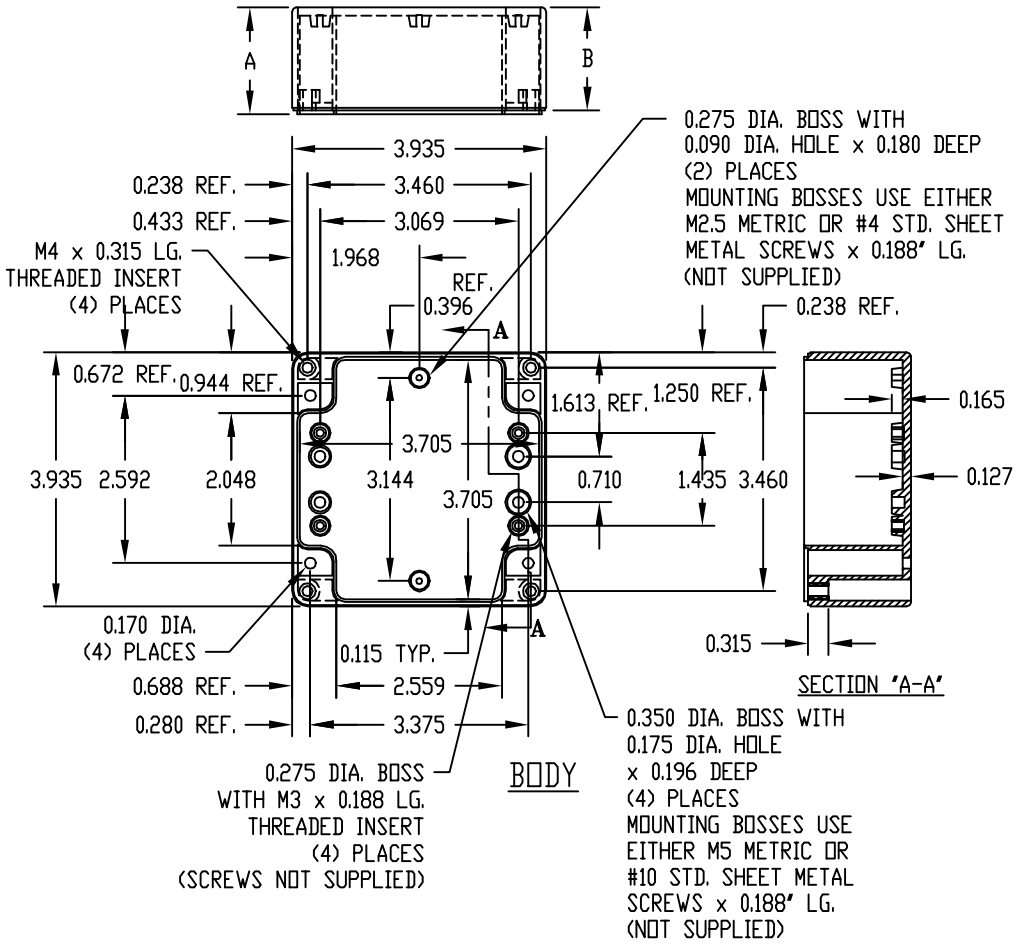

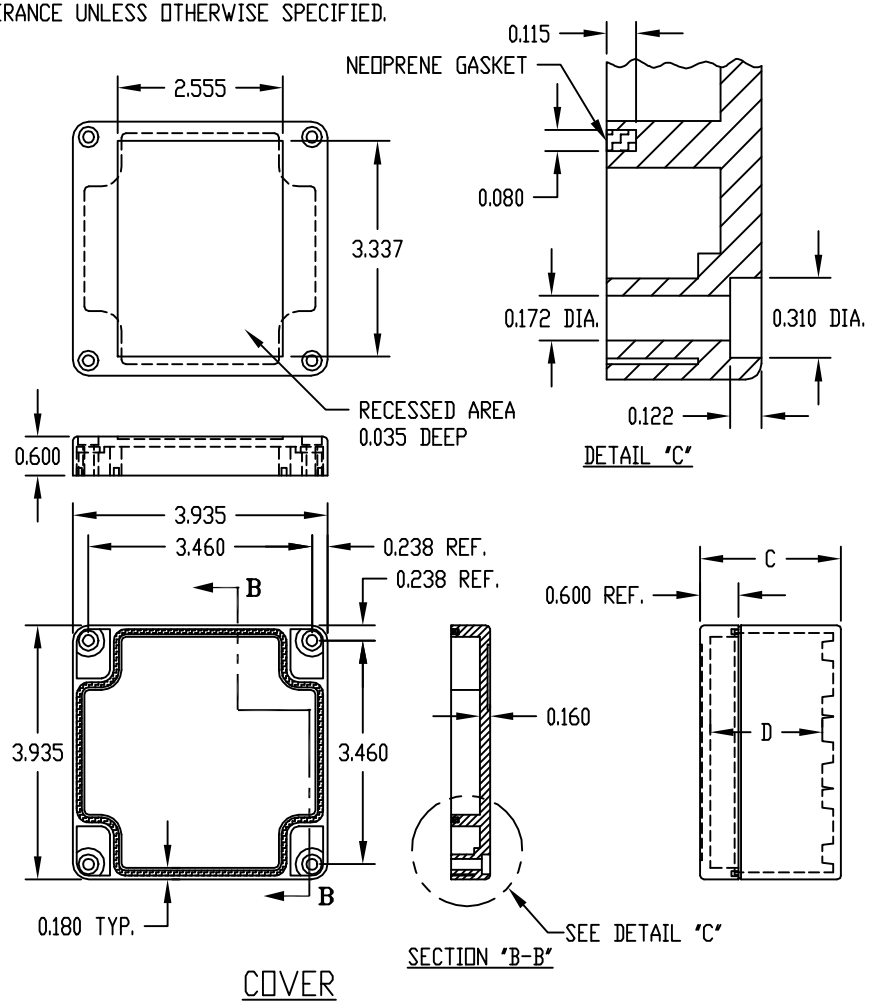

STYLE 1: LIGHT GRAY POLYCARBONATE BODY AND COVER.
STYLE 2: LIGHT GRAY POLYCARBONATE BODY AND CLEAR POLYCARBONATE COVER.
STYLE 3: DARK GRAY ABS BODY AND COVER.
ALL STYLES CONTAIN HARDWARE KIT WITH (4) M4 x 0.668" LG. SCREWS FOR ASSEMBLY.

STYLE 1	STYLE 2	STYLE 3	A	B	C	D
PNR-2600	PNR-2600-C	PNR-2600-DG	1.645	1.586	2.186	1.734
PNR-2601	PNR-2601-C	PNR-2601-DG	3.016	2.955	3.555	3.103

ISSUED: 13AUG02