Standard Buccaneer®

SEALING CAP/ASSEMBLY TOOL

- Maintains IP68 Rating of Unmated Connectors
- Can be used to remove Inserts
- PX0734 for Flex Cable Connector
- PX0733 for In-line Flex, Front Panel, Bulkhead and Flange mount connectors
- PX0711 for PCB and Rear Panel Mount connectors

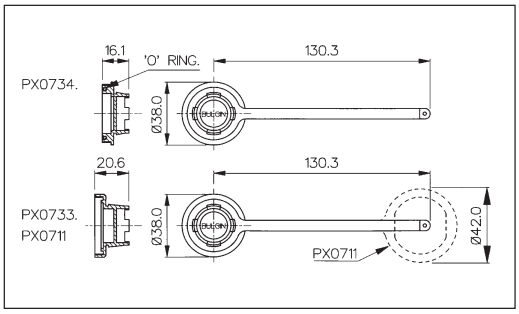

SPRUNG LOADED SEALING CAP

- IP54 rated
- Sprung loaded
- Clip shut to seal
- For use with front of panel mounting connector types

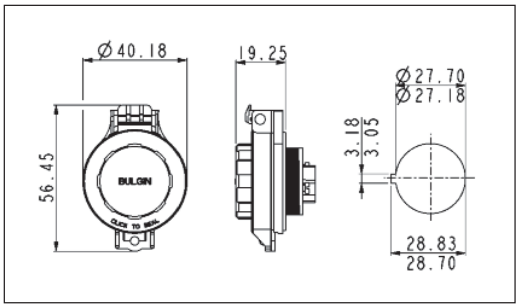

REAR OF PANEL BACKSHELL

- Provides environmental seal to rear of panel
- Standard cable acceptance 6-8mm, 3.5 to 9mm with alternative glands
- For use on front panel mounting connectors

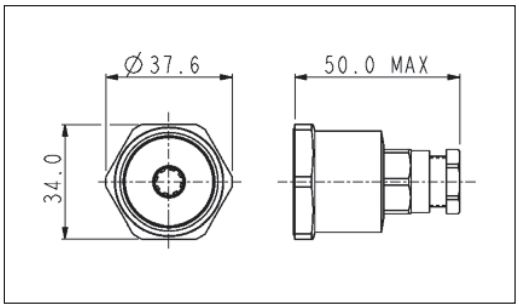

PVC INSULATION BOOT

- Protects Rear of the Connector
- Flammability Rating UL94V-0
- Fits Front Panel Mount Versions only

12855 for panel mounting types only.

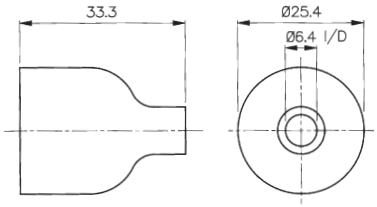

CABLE SUPPORT ACCESSORY

- Gives Extra Support to the Cable
- Suitable for 5-7mm and 7-9mm Cable Diameters
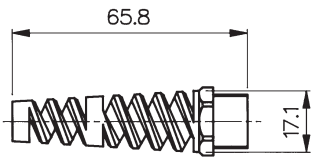
12237 provides additional cable support. Suitable for 5-7mm and 7-9mm cables.