REV.	DESCRIPTION	DATE
A	NEW DRAWING	11/17/2005
B	added PCB slot dimensions	10/7/2010

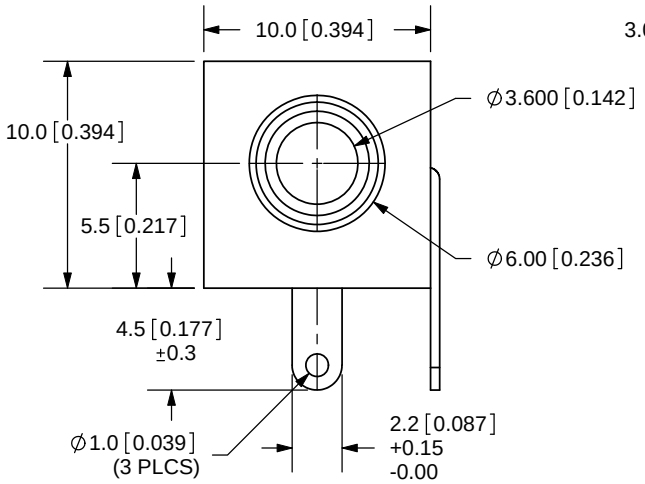

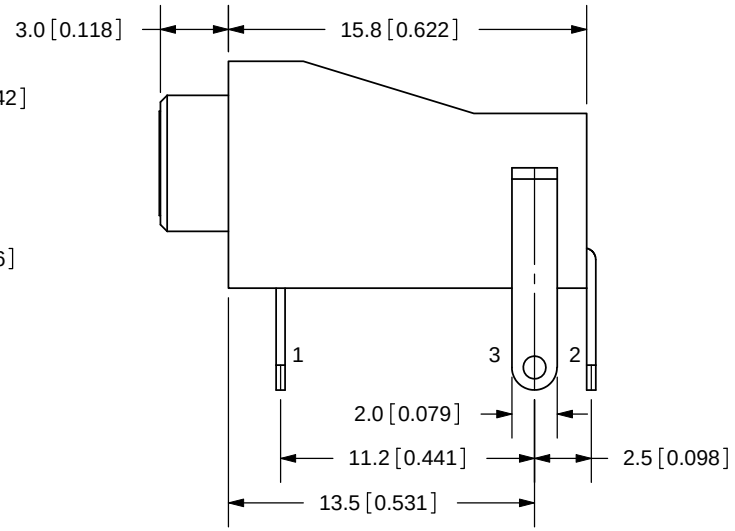

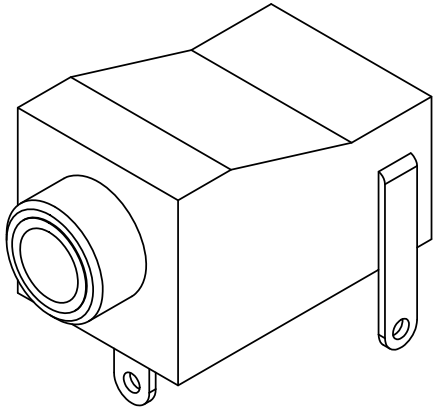

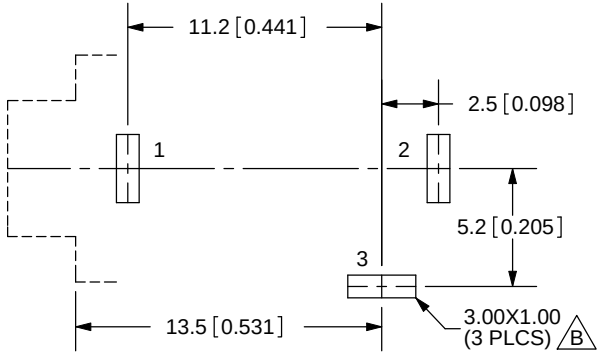

PCB LAYOUT
TOP VIEW

TOLERANCE:
X.X ±0.2mm
X.XX ±0.1mm
X.XXX ±0.05mm

RoHS

MODEL NO.	MJ-3536N
DIA.	NON-THREAD
	M6X0.5
SCHEMATIC	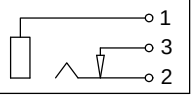

SPECIFICATIONS:
RATING: 12V DC @ 1A
CONTACT RESISTANCE: 30m OHMS MAX
INSULATION RESISTANCE: 50M OHMS MIN: 100V DC
VOLTAGE WITHSTAND: 500V AC R.M.S. FOR 1 MINUTE
LIFE: 5,000 CYCLES

	MATERIAL	PLATING
BUSHING	Brass	Nickel
TERMINAL 1	Brass	Tin
TERMINAL 2	Copper Alloy	Tin
TERMINAL 3	Brass	Tin
HOUSING	PBT	

CUI INC
20050 SW 112th Ave.
Tualatin, OR 97062
Phone: 503-612-2300
800-275-4899
Fax: 503-612-2383
Website: www.cui.com

TITLE: 3.5mm AUDIO JACK - MONO		REV: B
PART NO. MJ-3536N	UNITS: MM [INCHES]	
DRAWN BY: ZRJ	APPROVED BY:	SCALE: 3:1

PC FILE NAME: MJ-3536N

COPYRIGHT 2010 BY CUI INC.