REV.	DESCRIPTION	DATE
A	NEW DRAWING	1/3/2006
B	Updated PCB layout	4/19/2006

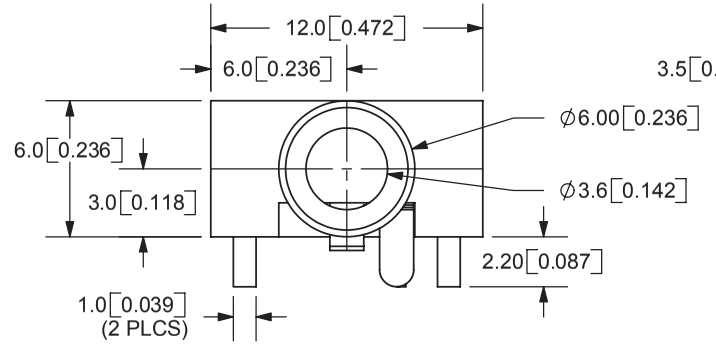

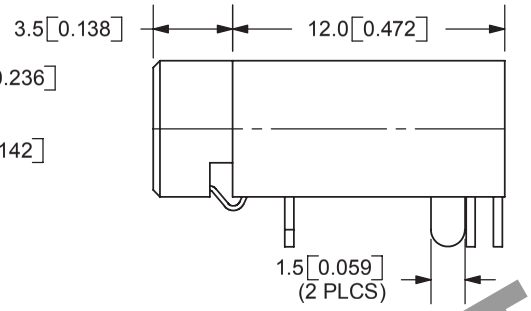

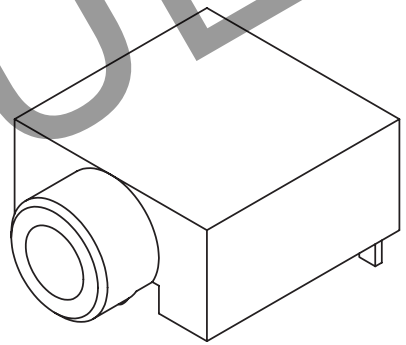

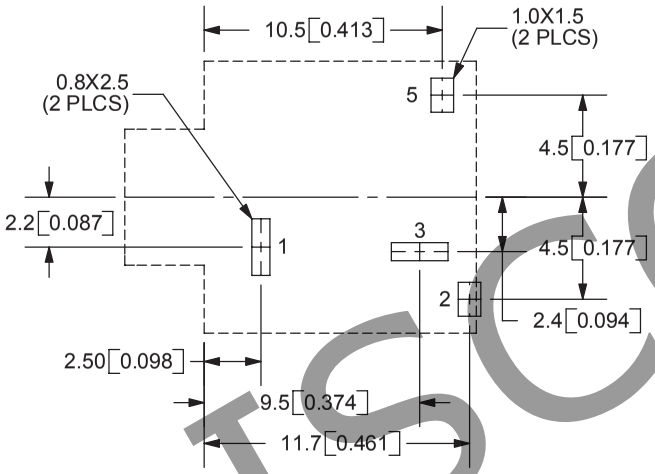

PCB LAYOUT
TOP VIEW

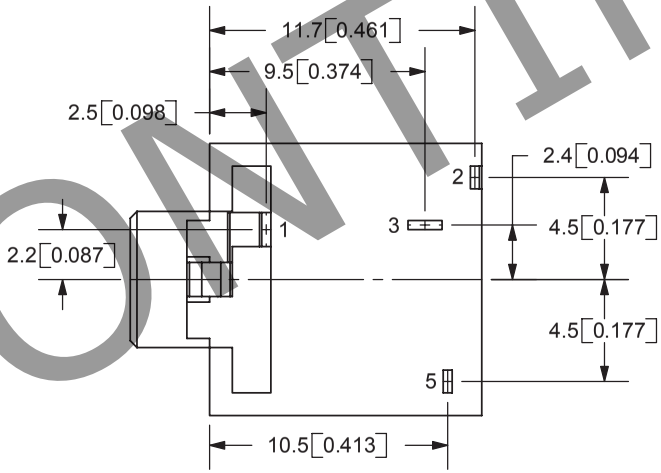

TOLERANCE:
±0.3mm UNLESS OTHERWISE SPECIFIED

MODEL NO.	SJ-3504
SCHEMATIC	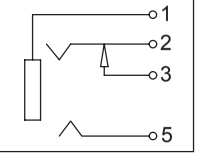

SPECIFICATIONS:
RATING: 12V DC @ 1A
CONTACT RESISTANCE: 10 ~ 20m OHMS MAX
INSULATION RESISTANCE: 50M OHMS MIN: 500V DC
VOLTAGE WITHSTAND: 250V AC R.M.S. FOR 1 MINUTE
LIFE: 10,000 CYCLES
OPERATING TEMP: -25° ~ +85°C

	MATERIAL	PLATING
TERMINAL 1	Brass	Silver
TERMINAL 2	Copper Titanium	Silver
TERMINAL 3	Brass	Silver
TERMINAL 5	Copper Titanium	Silver
HOUSING	PBT	

CUI INC
9615 SW Allen Blvd., Ste. 103
Beaverton, OR 97005
Phone: 503-643-4899
800-275-4899
Fax: 503-372-1266
Website: www.cui.com

TITLE: 3.5mm AUDIO JACK-STEREO		REV: B
PART NO. SJ-3504	UNITS: MM [INCHES]	
DRAWN BY: ZRJ	APPROVED BY:	SCALE: 3:1

PC FILE NAME: SJ-3504

COPYRIGHT 2006 BY CUI INC.

DISCONTINUED

Additional Resources: Product Page