Oct.1.2019 Copyright 2019 HIROSE ELECTRIC CO., LTD. All Rights Reserved.
In case of consideration for using Automotive equipment / device which demand high reliability, kindly contact our sales window correspondents.

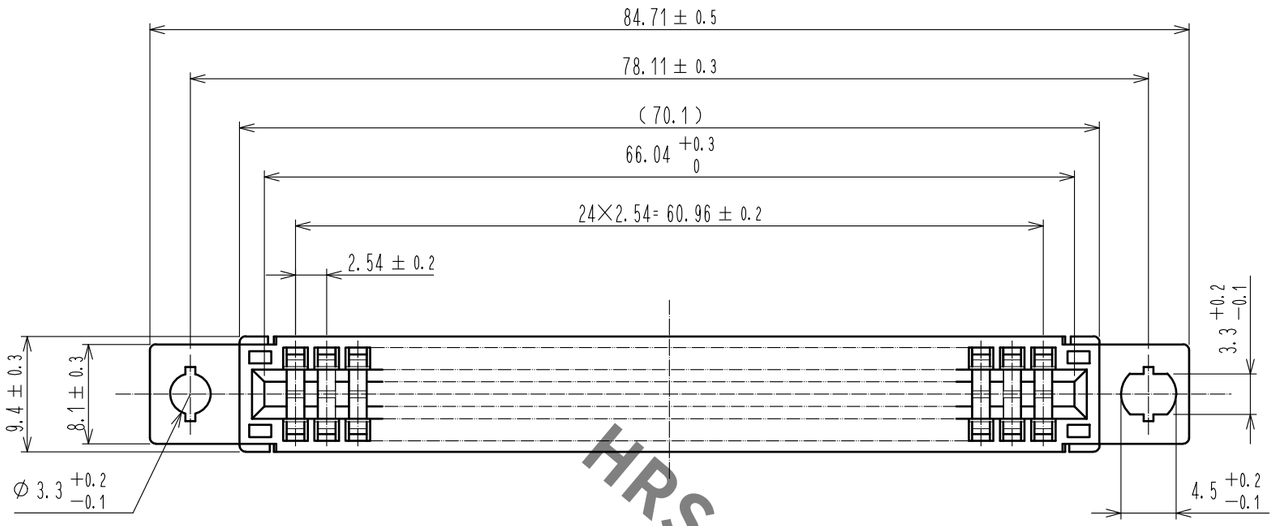

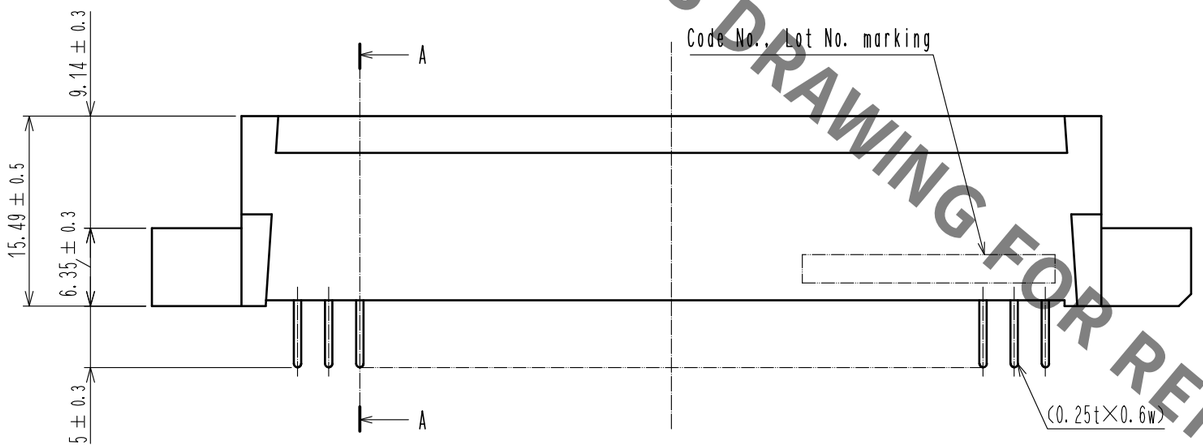

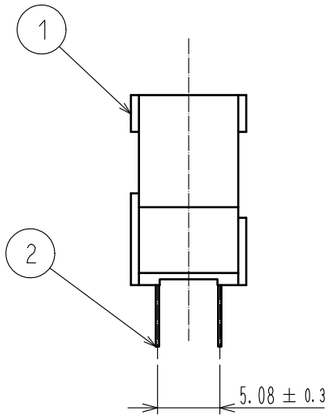

A-A

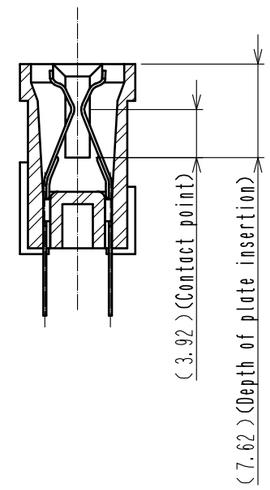

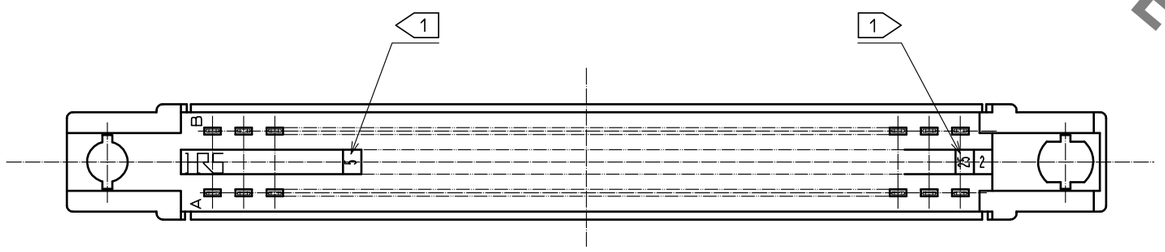

Recommended PC board hole pattern (t=1.6±0.1)

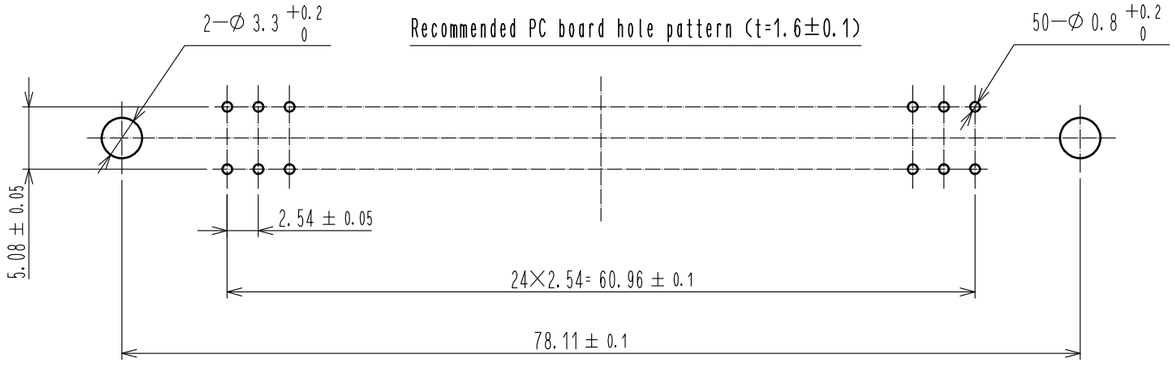

Notes 1 Contact No. (5, 10, 15, 20, 25) are shown.
2 A polarizing key inserted between the following contact positions. (5 to 6), (10 to 11), (15 to 16), (20 to 21).
3 The dimensions in parentheses are for reference.

NO.	MATERIAL	FINISH . REMARKS	NO.	MATERIAL	FINISH . REMARKS
1	PBT	BLACK UL94V-0	2	PHOSPHOR BRONZE	(Contact area)Ni2.5μm+Au0.05μm (Mounting area)Ni2.5μm+Sn2μm

UNITS	SCALE	COUNT	DESCRIPTION OF REVISIONS	DESIGNED	CHECKED	DATE
mm	2 : 1	0				

HIROSE ELECTRIC CO., LTD.

APPROVED	: HT. YAMAGUCHI	18.06.25	DRAWING NO.	EDC-017998-70-01
CHECKED	: HT. YAMAGUCHI	18.06.25	PART NO.	CR22B-50D-2.54DS(70)
DESIGNED	: TY. EDAGAWA	18.06.25	CODE NO.	CL522-0047-2-70
DRAWN	: MK. OOKI	18.06.21		0 1/1

HRS DRAWING FOR REFERENCE