May.1.2020 Copyright 2020 HIROSE ELECTRIC CO., LTD. All Rights Reserved.
In case of consideration for using Automotive equipment / device which demand high reliability, kindly contact our sales window correspondents.

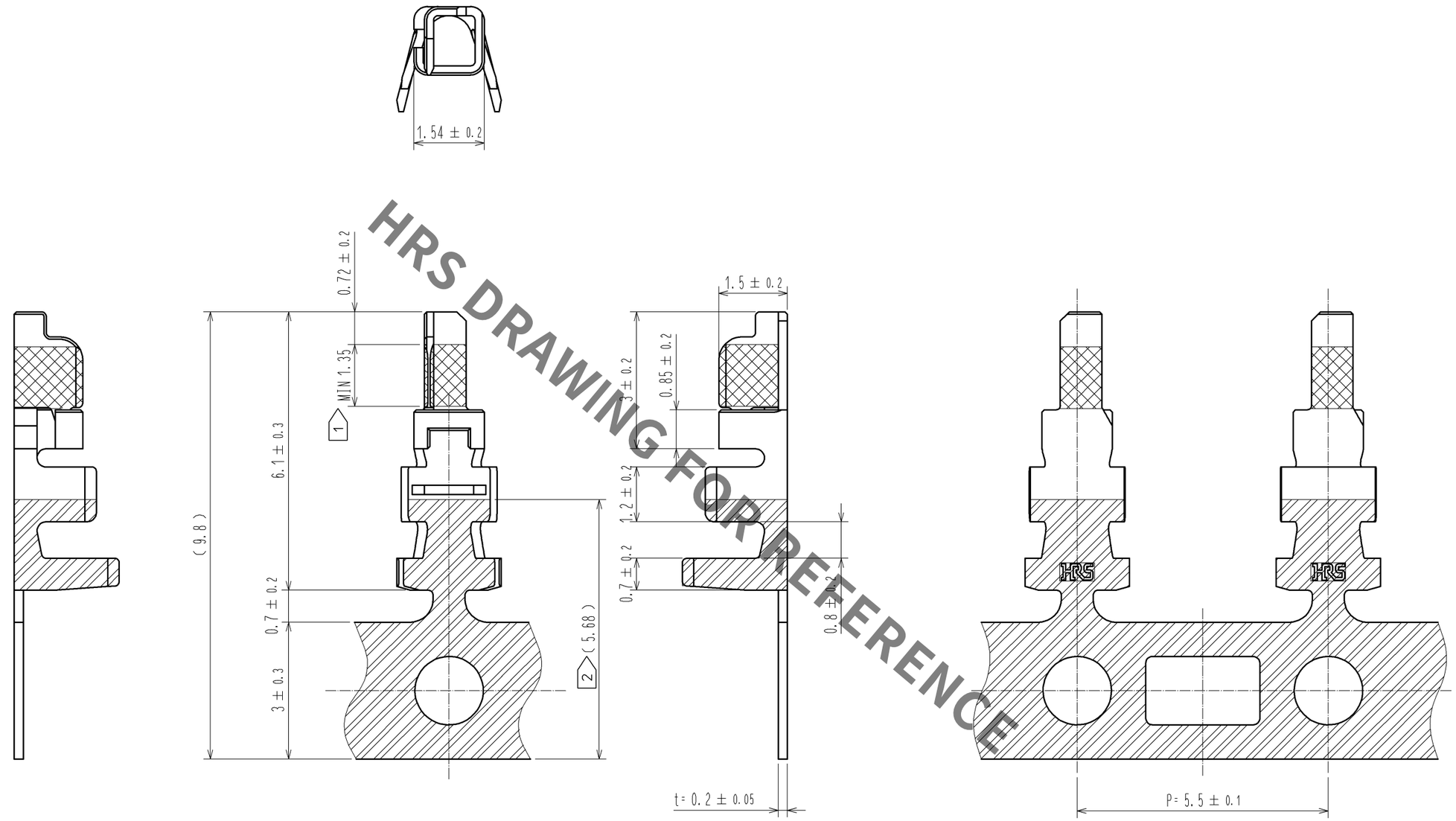

HRS DRAWING FOR REFERENCE

NOTE. 1 GOLD PLATING AREA POSITION.
2 TIN PLATING AREA POSITION.
3 1REEL : 10000 CONTACTS.
△1 4 UL(FILE NO. E52653),
C-UL(FILE NO. E52653) APPROVED PRODUCT.

NO.	MATERIAL	FINISH , REMARKS
1	PHOSPHOR BRONZE	CONTACT AREA : GOLD PLATING 0.2 μm MIN CARRIER AREA : TIN PLATING 1μm MIN OTHERS : NICKEL PLATING 0.5 μm MIN

UNITS	SCALE		COUNT	DESCRIPTION OF REVISIONS	DESIGNED	CHECKED	DATE
mm	5 : 1	△1	1	DIS-H-006791	ST. SATO	HK. UMEHARA	12. 04. 13

HRS HIROSE ELECTRIC CO., LTD.

APPROVED	: KI. AKIYAMA	10. 09. 28	DRAWING NO.	EDC3-331131-01
CHECKED	: OM. MIYAMOTO	10. 09. 27	PART NO.	DF59-22PCFA
DESIGNED	: KT. ISHII	10. 09. 27		
DRAWN	: KT. ISHII	10. 09. 27	CODE NO.	CL667-0016-8-00 △1 1/1

FORM HC0011-5-7