Jun.1.2020 Copyright 2020 HIROSE ELECTRIC CO., LTD. All Rights Reserved.
In case of consideration for using Automotive equipment / device which demand high reliability, kindly contact our sales window correspondents.

	COUNT	DESCRIPTION OF REVISIONS	BY	CHKD	DATE		COUNT	DESCRIPTION OF REVISIONS	BY	CHKD	DATE
△					. .	△					. .
△					. .	△					. .
△					. .	△					. .

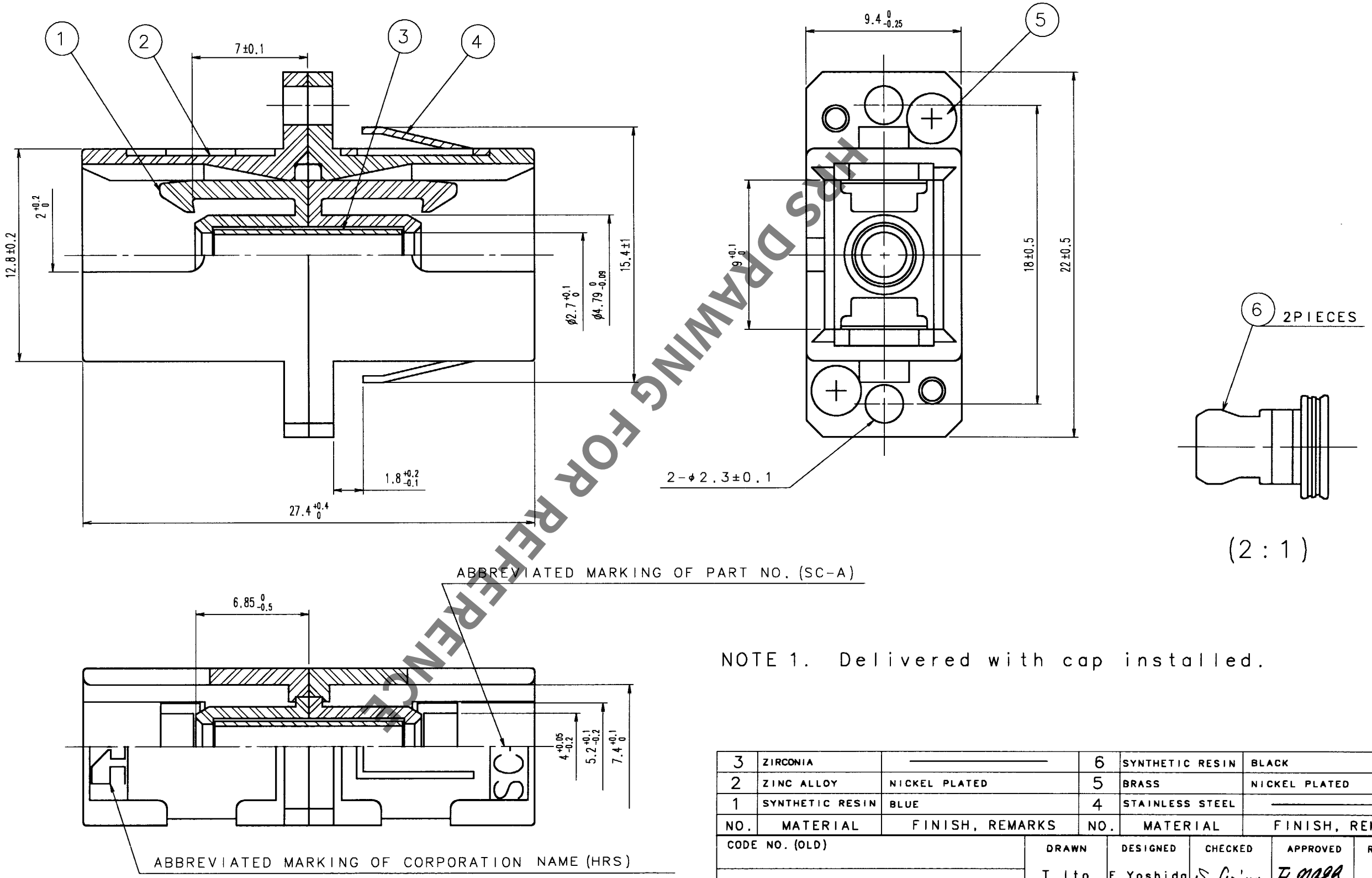

HRS DRAWING FOR REFERENCE

NOTE 1. Delivered with cap installed.

NO.	MATERIAL	FINISH, REMARKS	NO.	MATERIAL	FINISH, REMARKS
3	ZIRCONIA	———	6	SYNTHETIC RESIN	BLACK
2	ZINC ALLOY	NICKEL PLATED	5	BRASS	NICKEL PLATED
1	SYNTHETIC RESIN	BLUE	4	STAINLESS STEEL	———

CODE NO. (OLD)	DRAWN	DESIGNED	CHECKED	APPROVED	RELEASED
	T. Ito 01.02.05	F. Yoshida 01.02.05	S. Arima 01.2.8	F. Naga 01.2.8	

SCALE 4 : 1
UNITS mm

DRAWING NO. EDC3-170553-01

PART NO. HSC-A2-D1 (01)

HRS HIROSE ELECTRIC CO., LTD.

CODE NO. CL704-0258-2-01

1/1

FORM NO. 229

TO