図面番号(DRAWING NO.) SJ113505

版数 VER.	年月日 DATE	CN NO.	変更内容 DESCRIPTION	製図 DR.	担当 CHK.	査閲 APPD.	承認 APPD.
2	19/AUG/2013	007107	Correction of errors.		S.YAMAGUCHI	R.KATOU	T.SHINDOU
3	26/JUN/2014	008839	Correction of errors and deviation.		S.YAMAGUCHI	M.SASAKI	T.SHINDOU
4	27/JAN/2015	012209	ADDED DIMENSION etc.		S.YAMAGUCHI	M.SASAKI	T.SHINDOU

WISDOM承認 2015/01/30

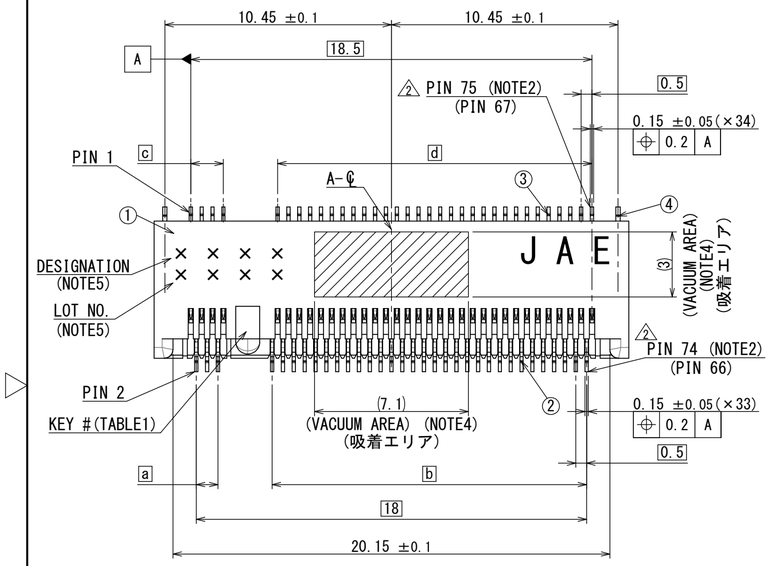

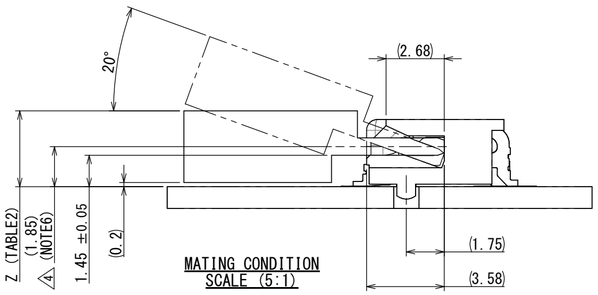

MATING CONDITION
SCALE (5:1)

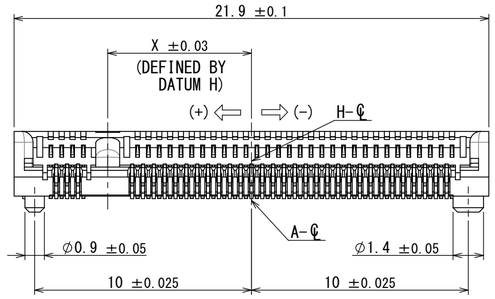

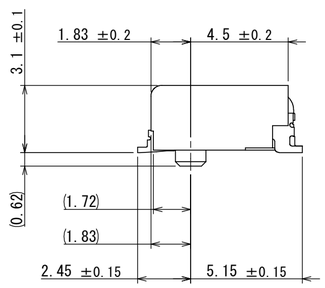

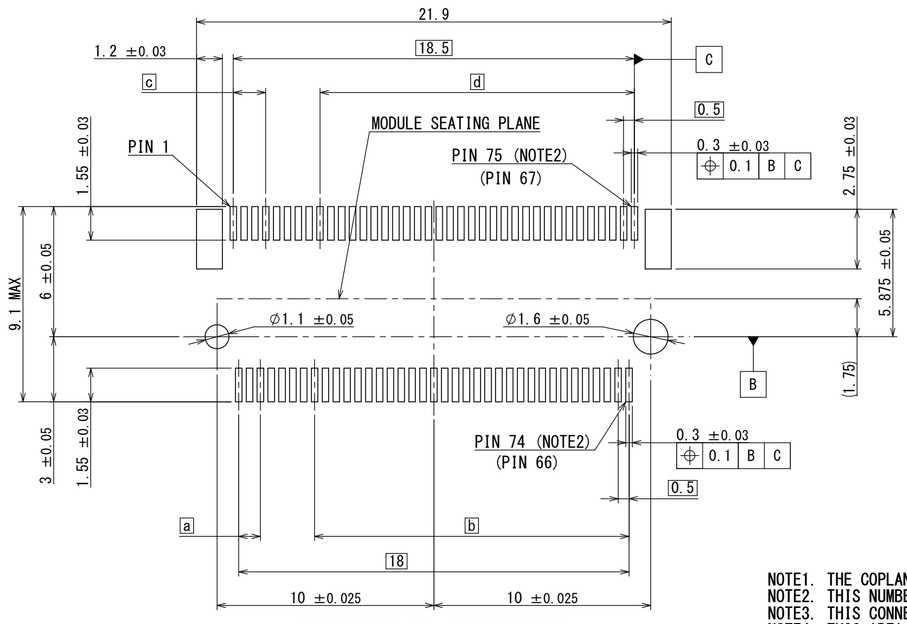

APPLICABLE P.C.B. DIMENSION(REF.)
SCALE(5:1)

NOTE5. PRODUCTION LOT No.&MODIFY CODE AS INDICATED.
(Ex. LOT NO.) T 5 Y B

- LOT NUMBER OF CURRENT DAY (SEE TABLE 4)
- MONTH (1 TO 9 FOR JAN. TO SEPT, RESPECTIVELY, OCT.:O, NOV.:X, DEC.:Y)
- YEAR (LAST DIGIT ONLY)
- MANUFACTURE CODE

(DESIGNATION) S M 3 A

- KEY POSITION TYPE:A,B,E,M
- SERIES PREFIX

DESIGNATION

SM3ZS067U310※※

- SERIES シリーズ
- Z:LIF TYPE Z:低挿入タイプ
- S:STANDARD
- NO. OF CONTACTS 芯数
- MOUNTING TYPE 実装タイプ U:ON BOARD TYPE
- PRODUCT HEIGHT 製品高さ 215:2.15mm 310:3.10mm 410:4.10mm
- KEY POSITION TYPE:A,B,E,M
- CONTACT FINISH 接点仕上げ A:Au(0.13μm MIN) B:Au(0.25μm MIN)

TABLE 1

KEY#	X	a	b	c	d
A	+6.625	1	14.5	1.5	14.5
B	+5.625	2	13.5	2.5	13.5
E	+2.625	5	10.5	5.5	10.5
M	−6.125	14	1.5	14	2

TABLE 2

COMPONENT HEGHTS FOR MODULES	Z
1.2 MAX	3.55 MAX RSS
1.35 MAX	3.70 MAX RSS
1.5 MAX	3.85 MAX RSS

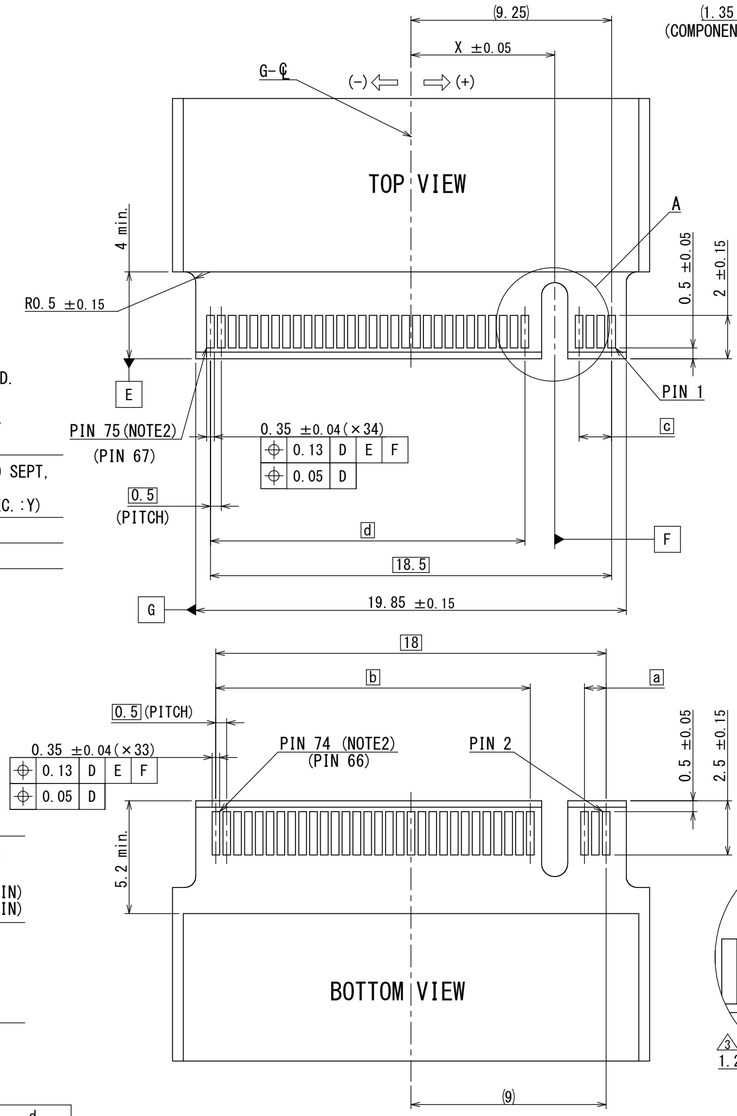

APPLICABLE MODULE DIMENSION(REF.)
SCALE(5:1)

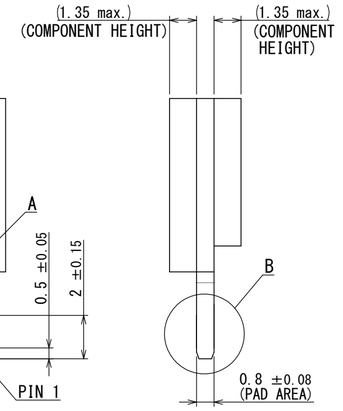

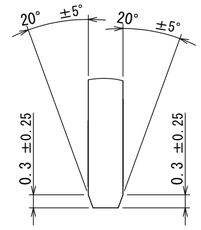

B
SCALE (10 : 1)

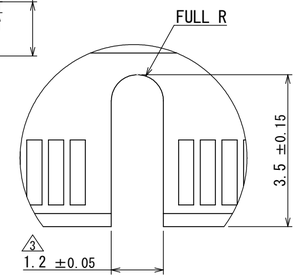

A
SCALE (10 : 1)

	NO.	名称 DESCRIPTION	個数 QTY.	材料 MATERIAL	仕上 FINISH	備考 REMARKS
	4	HOLD DOWN	2	COPPER ALLOY	TIN PLATING OVER NI	
3	3	TOP SIDE CONTACT	34	COPPER ALLOY	CONTACT AREA: REFER TO DESIGNATION SOLDERING AREA: Au FLASH OVER Ni	
3	2	BOTTOM SIDE CONTACT	33	COPPER ALLOY	CONTACT AREA: REFER TO DESIGNATION SOLDERING AREA: Au FLASH OVER Ni	
	1	INSULATOR	1	THERMO PLASTIC		

NOTE1. THE COPLANARITY OF CONTACT AND HOLD DOWN SHALL BE 0.1 MAXIMUM ON THE SURFACE TABLE.
NOTE2. THIS NUMBER IS PIN-OUT NUMBER DEFINED BY NGFF SPECIFICATION.
NOTE3. THIS CONNECTOR IS HALOGEN FREE CORRESPONDENCE PRODUCT.
NOTE4. THIS AREA SHALL NOT SHOW ANY BURRS AND UNEVEN SURFACE BY EJECTOR PIN MARK, TOOL PARTING LINE, AND ANY OTHER FACTORS.
4 NOTE6. THE HEIGHT TO THE MODULE CARD CENTER FROM P.C.B. SURFACE.

仕様書(SPECIFICATION)	第1版(ORIGINAL DATE) 08/JAN/2013	尺度(SCALE) 5:1	シリーズ(SERIES) SM3
一般公差(GENERAL TOLERANCE) 寸法(DIMENSION): .±0.8 / .×±0.4 / .××±0.1 / .×××± 角度(ANGLES): ×°± / ×°×'±	製図 DR.	名称(TITLE) SM3ZS067U310※※ (NGFF Double-Sided modules)	日本航空電子工業株式会社 JAPAN AVIATION ELECTRONICS INDUSTRY, LTD.
	担当 CHK. S.YAMAGUCHI		
	査閲 APPD. R.KATOU		
	承認 APPD. T.SHINDOU		
	単位(UNIT):mm	質量(MASS)	図面番号(DRAWING NO.) SJ113505

SIZE A2 版数(VER.) 4

JAE-CONNECTOR.COM
Reference Only

JAE Connector DIV. Proprietary.Copyright(C) 2013, Japan Aviation Electronics Industry, LTD.

DCF-C-213H(12.08)