KEMET Part Number: GL-2060C Obsolete

KEMET, GL-C, EMI/RFI Filters, Noise Suppression, 250 VAC, 250 V, 6 A

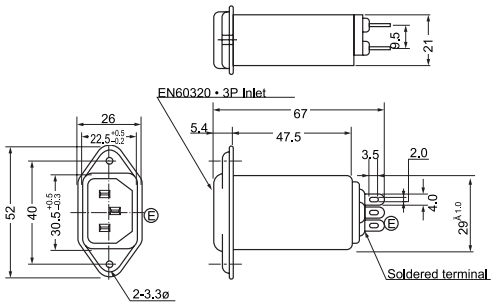

General Information	
Series:	GL-C
Style:	Inlet
Description:	Noise Filters
Features:	Inlet Type
RoHS:	Yes
Qualifications:	UL, CSA, TUV, VDE
Miscellaneous:	30 K Self-Temperature Rise Max.

Dimensions	
L	67mm NOM
W	52mm NOM
H	26mm NOM

Packaging Specifications	
Weight:	55 g

Specifications	
Voltage AC:	250 VAC
Ripple Current:	6 A (AC/DC)
Temperature Range:	-25/+55°C
Voltage:	250 VDC, 1500 VAC Withstanding Voltage 1 Min. Line to Ground
Leakage Current:	500 uA MAX (250 V 60 Hz)
Resistance:	300 MOhms MIN Insulation 500 VDC 1 Min. Line To Ground

Statements of suitability for certain applications are based on our knowledge of typical operating conditions for such applications, but are not intended to constitute - and we specifically disclaim - any warranty concerning suitability for a specific customer application or use. This Information is intended for use only by customers who have the requisite experience and capability to determine the correct products for their application. Any technical advice inferred from this Information or otherwise provided by us with reference to the use of our products is given gratis, and we assume no obligation or liability for the advice given or results obtained.

© 2006 - 2020 KEMET