KYCON, Inc. 1810 Little Orchard Street, San Jose, CA 95125 (408)494-0330

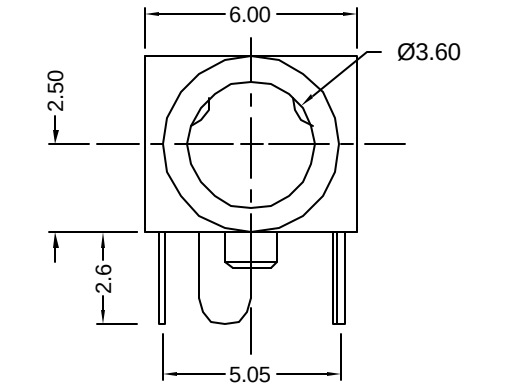

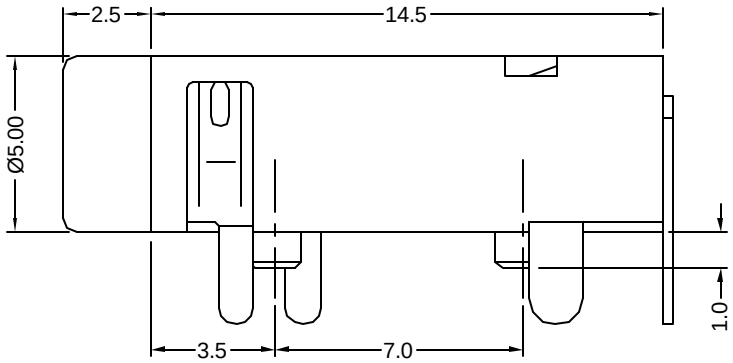

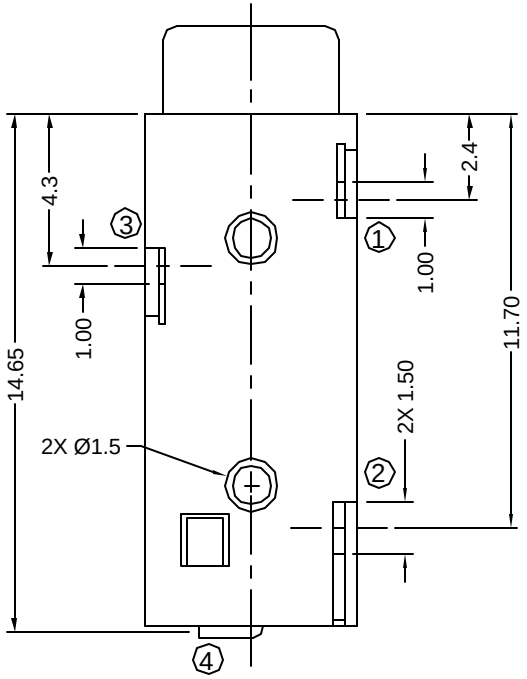

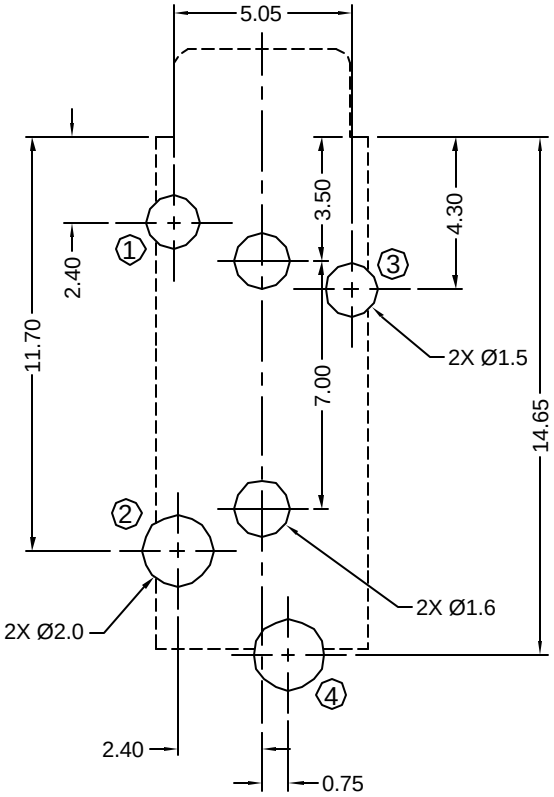

Recommended PCB Layout
(Top View)

Materials and Finish

Housing: LCP, black color
UL 94V-0 Rated

Terminals: Copper Alloy,
Silver Plating all over
Nickel Underplating

Mechanical Characteristics

Insertion Force:
3.0kg Max.

Extraction Force:
0.2kg Min.

Durability: 5000 mating cycles

Electrical Characteristics

Contact Resistance:
Before Test: 50 milliohms Max.
After Durability Test:
100 milliohms Max.

Rated Voltage:
16 V DC

Rated Current:
0.3A

Insulation Resistance:
100 Megohms Min.
at 500V DC

Dielectric Strength:
500V AC RMS for 1 minute

Operating Temp:
-25°C to +85°C

Schematic

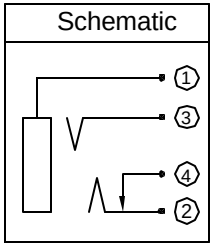

RoHS COMPLIANT
EU Directive 2002/95/EC

C US
LR78160

Tolerances
X.X ± 0.25
X.XX ± 0.15
Unless Stated Otherwise

PRELIMINARY
PART IN DESIGN
SPECIFICATION SUBJECT TO CHANGE

REV.	DATE	DESCRIPTION	REV. BY	CHK. BY	DRAWN BY	DATE
A0	9/28/05	New Drawing	R. Aguirre	H. MA	R. Aguirre	07/14/05
						UNITS
						mm

STX-3501-4N

3.5mm Stereo Jack, 4 position, RoHS Compliant

All Plastic Body, Rt. Ang., Thru Hole

KYCON