LENGTH CHART												
CIRCUITS	MATERIAL NO.	ENG. NO.	A	(A mm)	B	(B mm)	C	(C mm)	D	(D mm)	E	(E mm)
2	394260002	425902	1.74	44.2	.472	12.00	.99	25.1	1.316	33.43	1.361	34.57
3	394260003	425903	2.21	56.1	.945	24.00	1.46	37.1	1.789	45.44	1.833	46.56
4	394260004	425904	2.68	68.1	1.417	36.00	1.93	49.0	2.261	57.40	2.306	58.57
5	394260005	425905	3.15	80.0	1.890	48.00	2.40	61.0	2.733	69.42	2.778	70.56
6	394260006	425906	3.63	92.2	2.362	60.00	2.88	73.0	3.206	81.43	3.250	82.55
7	394260007	425907	4.10	104.1	2.835	72.00	3.35	85.1	3.678	93.42	3.723	94.56
8	394260008	425908	4.57	116.1	3.307	84.00	3.82	97.0	4.151	105.43	4.195	106.55

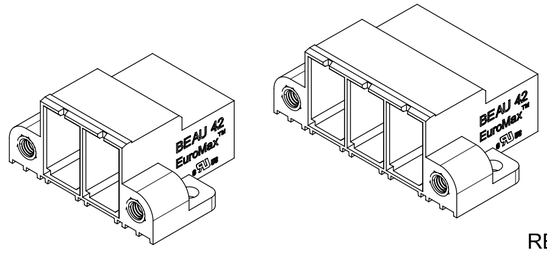

REF. 2C AND 3C HEADERS HAVE NO PRY SLOTS

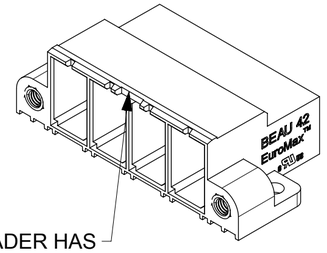

REF. 4C HEADER HAS SINGLE PRY SLOT

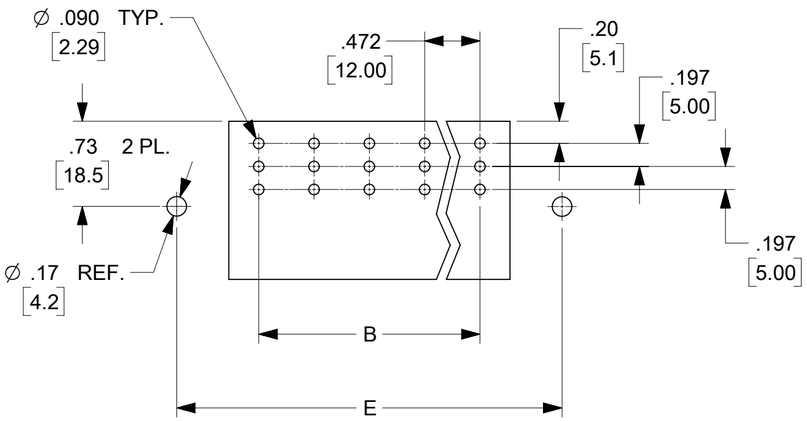

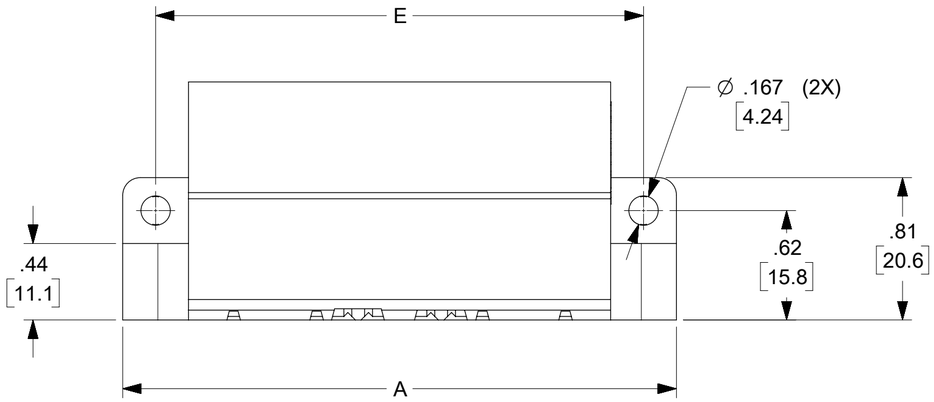

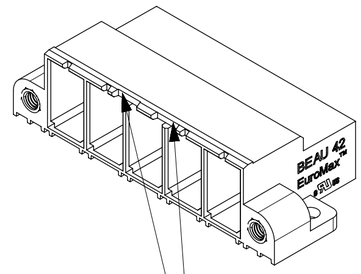

REF. 5 THRU 8C HEADERS HAVE TWO PRY SLOTS

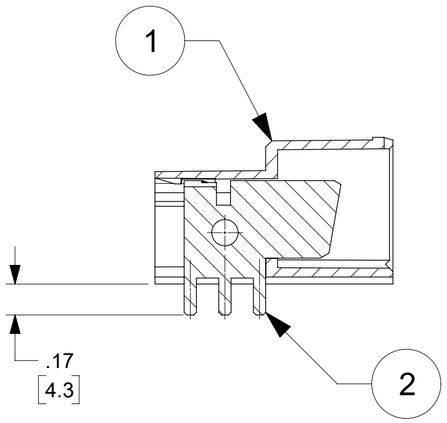

SECTION A-A

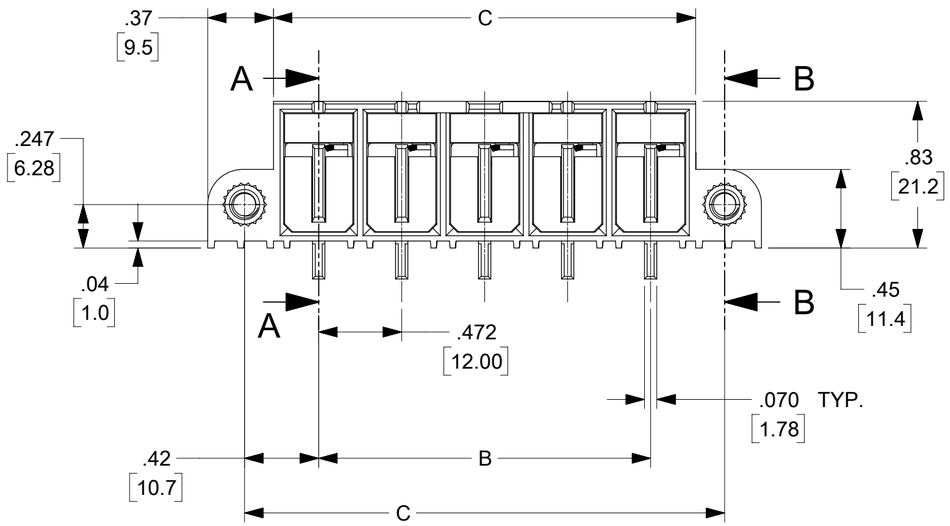

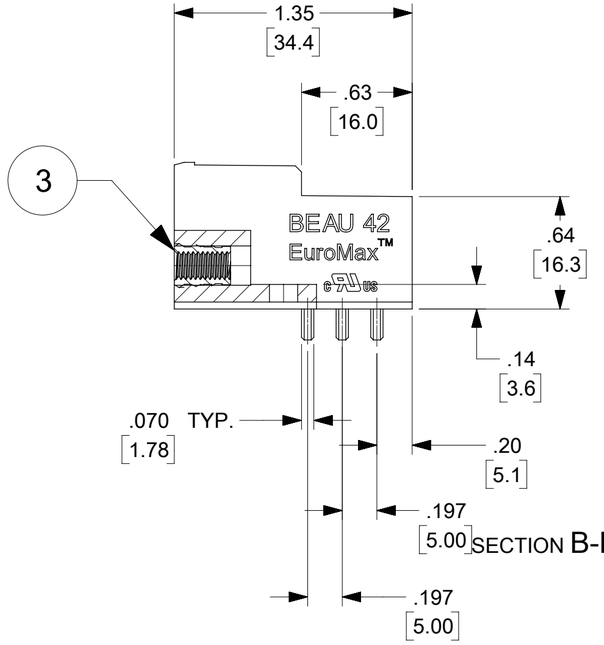

SECTION B-B

NOTES:
1. MATERIAL: SEE TABLE
2. FINISH: SEE TABLE
3. ELECTRICAL SPECS:
   VOLTAGE RATING: 600V
   CURRENT RATING: 85A
4. PRODUCT SPEC: PPS.42.001
5. XX EQUALS NUMBER OF CIRCUITS
6. DIMS. SHOWN ARE FOR REFERENCE ONLY
   UNLESS NOTED OTHERWISE

TABLE

3	2	M4 THREADED INSERT	BRASS	
2	XX	CONTACT BLADE	COPPER	TIN PLATED
1	1	HEADER	PA66	BLACK
ITEM	QTY	DESCRIPTION	MATERIAL	FINISH

RELEASE STATUS		RELEASE DATE	

QUALITY SYMBOLS
FA = 0
FC = 0
FP = 0
▼ = 0
C = 0
☒ = 0
■ = 0
C = 0

THIS DRAWING CONTAINS INFORMATION THAT IS PROPRIETARY TO MOLEX ELECTRONIC TECHNOLOGIES, LLC AND SHOULD NOT BE USED WITHOUT WRITTEN PERMISSION

EC NO: 105770 2016/11/11
DRWN: RSTONE 2016/11/23
CHK'D: BRUPERT 2017/01/12
APPR: BWOODMAN

REV: B

GENERAL TOLERANCES (UNLESS SPECIFIED)

	MM	INCH
4 PLACES	±	±
3 PLACES	±	±
2 PLACES	±	± 0.01
1 PLACES	± 0.3	±
0 PLACES	±	±

ANGULAR TOL ±

DRAFT WHERE APPLICABLE MUST REMAIN WITHIN DIMENSIONS

DIMENSION UNITS: INCH/MM
SCALE: 1:1
DRWN BY: R KEMP DATE: 2004/10/19
CHK'D BY: - DATE: -
APPR BY: - DATE: -
DRAWING SIZE: C
THIRD ANGLE PROJECTION

molex®

HEADER ASSEMBLY
12MM, 85A, 600V WITH MOUNTING ENDS

PRODUCT CUSTOMER DRAWING

SERIES	MATERIAL NUMBER	CUSTOMER
39426	SEE CHART	GENERAL MARKET

DOCUMENT NUMBER	DOC TYPE	DOC PART	SHEET NUMBER
SD-39426-001	PSD	000	1 OF 1

FORMAT: Eng-lega-master-tb-prod-C
REVISION: C
DATE: 2016/02/04