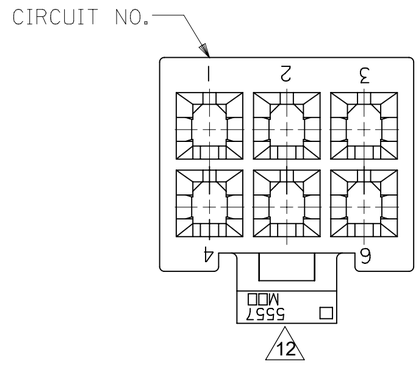

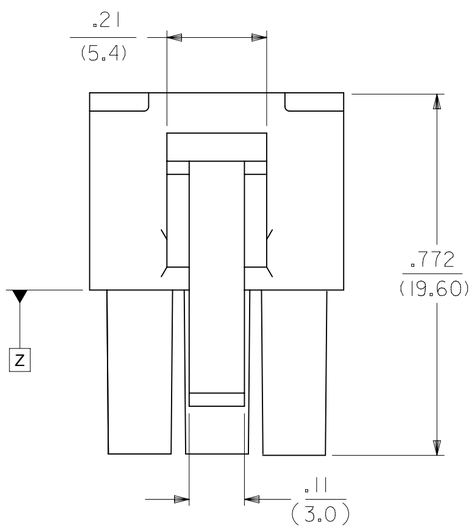

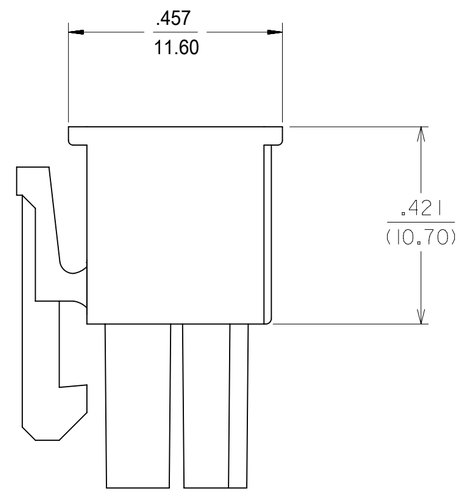

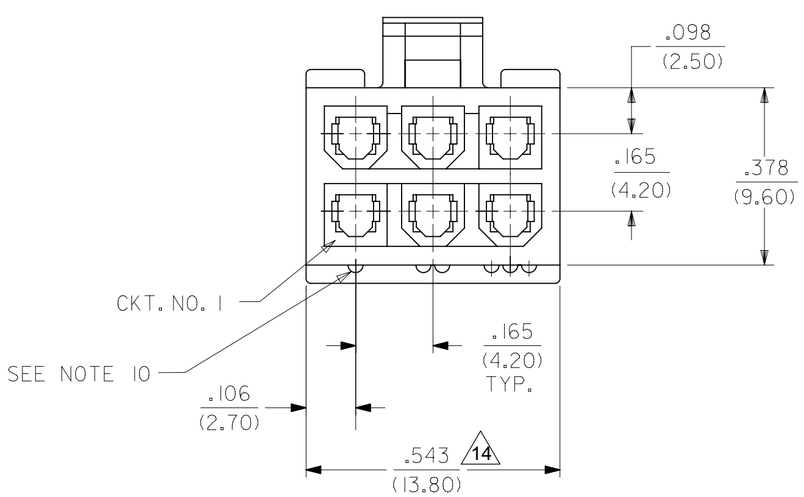

NOTES:

1) HOUSING MATERIAL: NYLON, UNFILLED UL94 V-0, COLOR: SEE CHART
2) FINISH: NONE
3) PRODUCT SPECIFICATION: PS-45558-001
4) PACKAGING SPECIFICATION: PK-5557-002
5) PARTS MATE WITH MINI-FIT JR. RIGHT ANGLE HEADER ASSEMBLIES 455580002, 455580003 AND 457320001.
6) PART TO BE USED WITH MOLEX FEMALE TERMINAL #5556.
7) ALL DIMENSIONS ARE REFERENCE UNLESS OTHERWISE SPECIFIED WITH A TOLERANCE.
8) PART IS NOT DESIGNED FOR CURENT SHARING.
9) PARTS ARE NOT TO BE MATED OR UNMATED WHILE CIRCUITS ARE LIVE
10) RIBS INDICATE CIRCUIT NUMBER.
11) PART CONFORMS TO CLASS "B" REQUIREMENTS OF COSMETIC SPECIFICATION PS-45499-002.
12) TEXT ON PART IS FOR REFERENCE ONLY. TEXT AND TEXT LOCATION MAY VARY DEPENDING ON PART NUMBER AND/OR TOOL.
13) WIRES ARE TO BE DRESSED IN A MANNER TO ALLOW THE TERMINALS TO FLOAT FREELY IN THE POCKET.
14) TO BE MEASURED AT SURFACE Z .

PART NUMBER	COLOR
45559-0002	BLACK
45559-0003	WHITE

THIS DRAWING CONTAINS INFORMATION THAT IS PROPRIETARY TO MOLEX ELECTRONIC TECHNOLOGIES, LLC AND SHOULD NOT BE USED WITHOUT WRITTEN PERMISSION

QUALITY SYMBOLS: EA = 0; EC = 0; EP = 0; ▼ = 0; C = 0; ☒ = 0; ■ = 0; C = 0

EC NO: 169186 — ADD NOTES 12,13,14 — 2017/12/08
DRWN: AZAHIROVIC — 2017/12/14
CHK'D: JBELL
APPR: FSMITH — 2018/01/08
REV: A4

GENERAL TOLERANCES (UNLESS SPECIFIED)

	MM	INCH
4 PLACES	±	±
3 PLACES	±	± 0.01
2 PLACES	± 0.25	± 0.015
1 PLACES	± 0.38	±
0 PLACES	±	±
ANGULAR TOL ±		

DRAFT WHERE APPLICABLE MUST REMAIN WITHIN DIMENSIONS

DIMENSION UNITS: IN/MM — SCALE: NTS
DRWN BY: JJS — DATE: 2003/11/11
CHK'D BY: GEP — DATE: 2003/11/11
APPR BY: YLM — DATE: 2003/11/11
DRAWING SIZE: C — THIRD ANGLE PROJECTION

molex®

6 CKT. RECEPT. HOUSING
SPECIAL POLARIZATION MINI-FIT JR. SERIES

PRODUCT CUSTOMER DRAWING

SERIES	MATERIAL NUMBER	CUSTOMER
45559	SEE CHART	GENERAL MARKET

DOCUMENT NUMBER	DOC TYPE	DOC PART	SHEET NUMBER
SD-45559-001	PSD	001	1 OF 1

RELEASE STATUS	P1	RELEASE DATE	08.01.2018 23:05:13

FORMAT: Eng-lega-master-tb-prod-C
REVISION: C
DATE: 2017/02/06