ITEM NO.	FORM	WIRE GAGE	DIM. "B"	DIM. "C"	DIM. "D"	DIM. "E"	DIM. "F"	DIM. "G"
460182541	CHAIN	22-24	.091±.012 (2.30±0.30)	.091±.016 (2.30±0.40)	.024±.016 (0.60±0.40)	.071±.012 (1.80±0.30)	.065±.016 (1.65±0.40)	.016 (0.40)
460181541	CHAIN	18-20	.142±.012 (3.60±0.30)	.177±.016 (4.50±0.40)	.035±.016 (0.90±0.40)	.075±.012 (1.90±0.30)	.091±.016 (2.30±0.40)	.020 (0.50)
460183541	CHAIN	16	.142±.012 (3.60±0.30)	.177±.016 (4.50±0.40)	.035±.016 (0.90±0.40)	.091±.012 (2.30±0.30)	.106±.016 (2.70±0.40)	.024 (0.60)

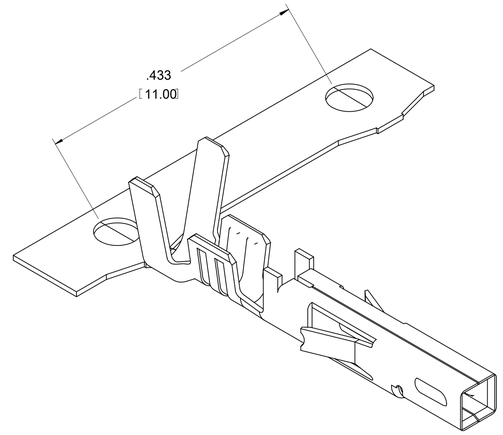

NOTES:

1. MATERIAL: COPPER ALLOY .0080/(0.203) THICK
2. FINISH:
   1. .000030/.00076 MIN. SELECT GOLD IN CONTACT AREA AND .000100/.00254 MIN. SELECT MATTE TIN IN CRIMP AREA OVER .000050/.00127 MIN. NICKEL OVERALL.

   PROPRIETARY MOLEX ADVANCED CONTACT SURFACE FINISH (CSF) IN CONTACT AREA.
3. PRODUCT SPECIFICATION: PS-46018-004
4. PACKAGING INFORMATION: PK-46018-001 FOR CHAIN TERMINALS
5. MATES WITH: MALE TERMINAL SERIES 46012 AND HEADERS 46011, 44068, 42404, 43810, 46014, 5569, 46015, 30070.
6. TERMINAL FOR USE WITH 5557, 42474, 44516, 43760, AND 30067 SERIES HOUSINGS.
7. WHEN TERMINALS ARE INSTALLED IN THE HOUSING, THE WIRES ARE TO BE DRESSED IN SUCH A MANNER TO ALLOW THE TERMINALS TO FLOAT FREELY IN THE POCKET.
8. THIS TERMINAL IS DESIGNED FOR SINGLE WIRE CRIMPING.
9. THIS PART CONFORMS TO CLASS B REQUIREMENTS OF COSMETIC SPEC PS-45499-002.
10. TEXT ON PART IS FOR REFERENCE ONLY. TEXT AND TEXT LOCATION MAY VARY DEPENDING ON PART NUMBER AND/OR TOOL.
11. THE NUMBER OF SERRATIONS TO BE ONE FOR WIRE RANGE #22-#24.

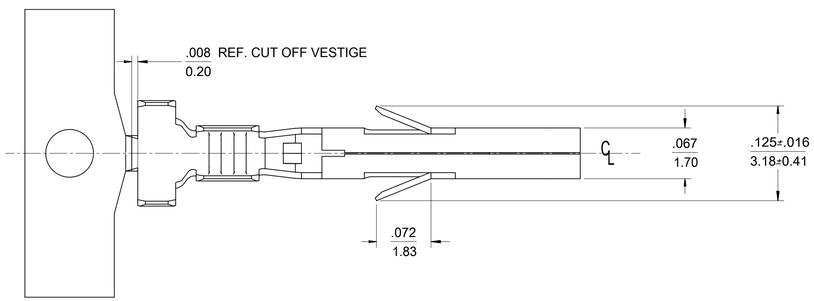

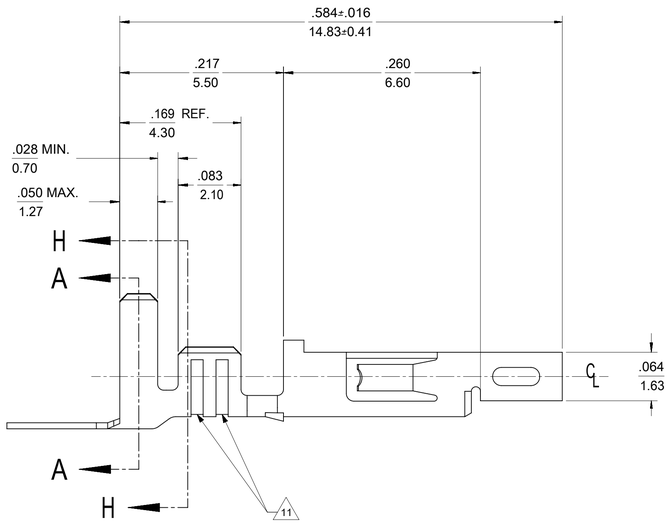

LEGEND

46018*54*

BASE NUMBER

WIRE GAGE
1 = 18-20
2 = 22-24
3 = 16

FORM
1 = CHAIN

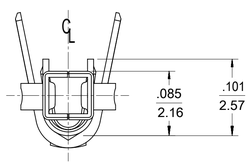

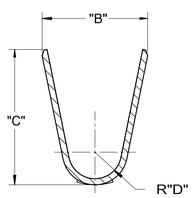

SECTION A-A

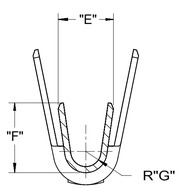

SECTION H-H

RELEASE STATUS	P1	RELEASE DATE	13.11.2017 15:48:35

QUALITY SYMBOLS: = 0 / = 0 / = 0 / = 0 / = 0 / = 0 / = 0 / = 0

THIS DRAWING CONTAINS INFORMATION THAT IS PROPRIETARY TO MOLEX ELECTRONIC TECHNOLOGIES, LLC AND SHOULD NOT BE USED WITHOUT WRITTEN PERMISSION

REV	EC NO:	DRWN:	CHK'D:	APPR:
E2	121216	BAPPELDORN	JBELL	FSMITH

ADD NOTE 10 & 11 — 2017/08/29, 2017/11/08, 2017/11/13

GENERAL TOLERANCES (UNLESS SPECIFIED)

	MM	INCH
4 PLACES	±	±
3 PLACES	±	± 0.01
2 PLACES	± 0.25	± 0.014
1 PLACES	± 0.36	±
0 PLACES	±	±

ANGULAR TOL ± 0.5

DRAFT WHERE APPLICABLE MUST REMAIN WITHIN DIMENSIONS

DIMENSION UNITS: IN/MM — SCALE: 10:1

DRWN BY: TGREGORI — DATE: 2005-08-17

CHK'D BY: JCOMERCI — DATE: 2005-08-07

APPR BY: JCOMERCI — DATE: 2005-08-07

DRAWING SIZE: D — THIRD ANGLE PROJECTION

molex®

FEMALE CRIMP TERMINAL
MINI-FIT PLUS HIGH MATING CYCLE(46018)

PRODUCT CUSTOMER DRAWING

SERIES	MATERIAL NUMBER	CUSTOMER
46018	SEE CHART	GENERAL MARKET

DOCUMENT NUMBER	DOC TYPE	DOC PART	SHEET NUMBER
SD-46018-001	PSD	001	1 OF 1