MATERIALS AND FINISHES

BODY ZINC ALLOY
PLATED NICKEL

CENTER CONTACT PHOSPHOR BRONZE
PLATED GOLD

INSULATOR POLYPROPYLENE

HOUSING P.B.T.
COLOR BLACK

SOLDER TAIL BRASS
PLATED TIN

BOARD LOCK CLIP
PHOSPHOR BRONZE
PLATED TI

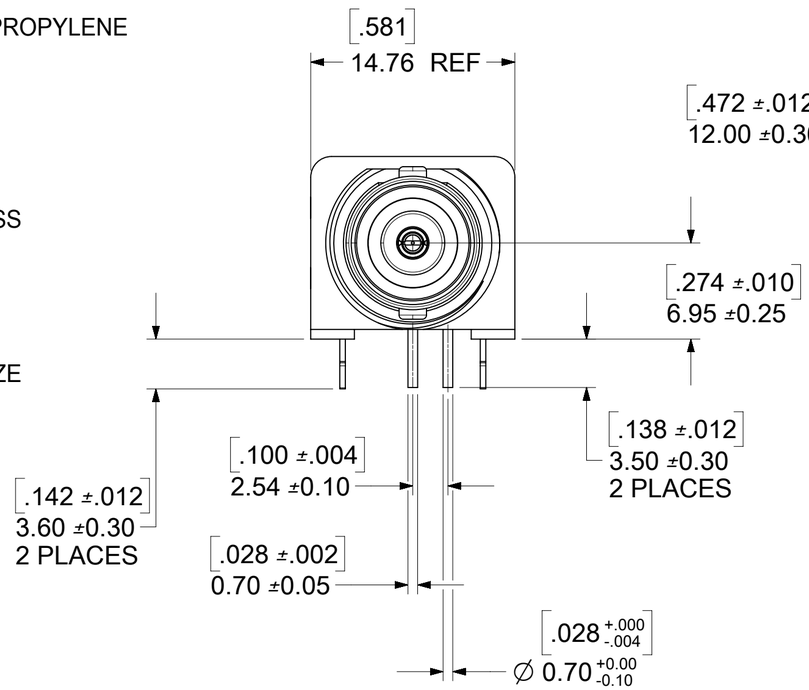

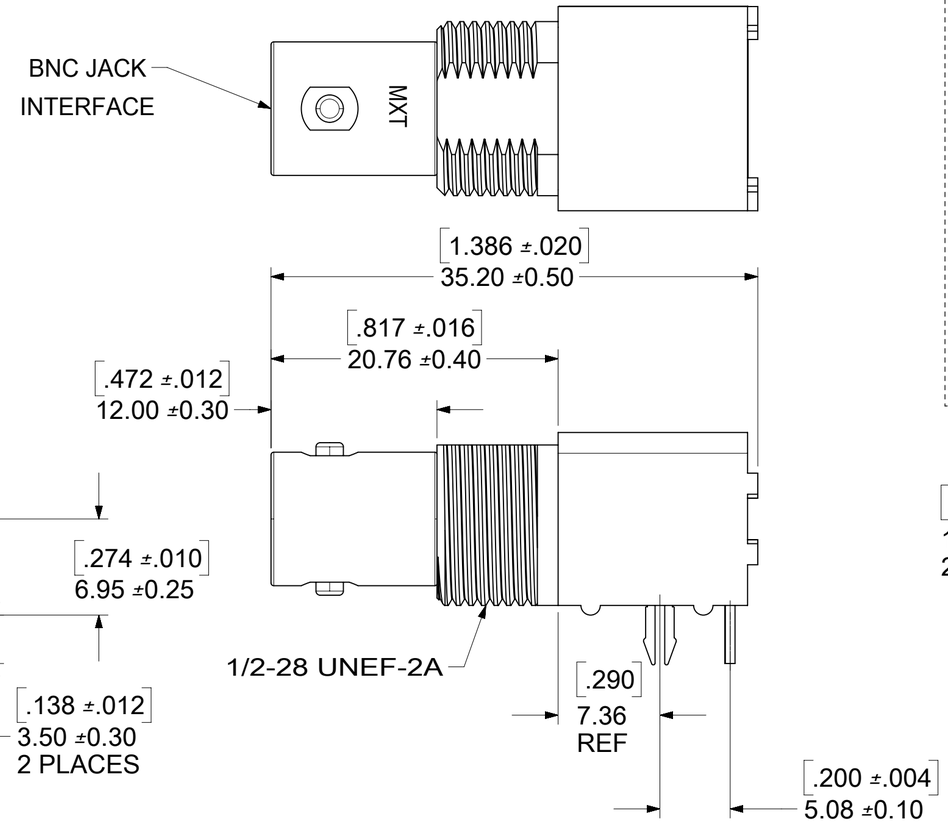

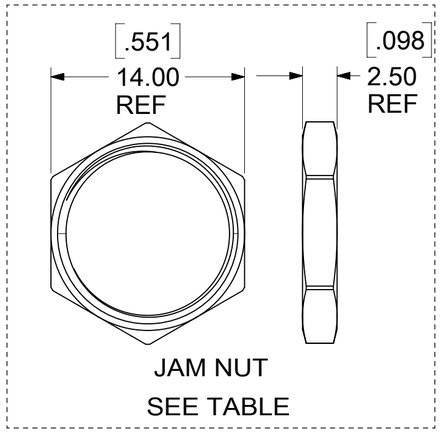

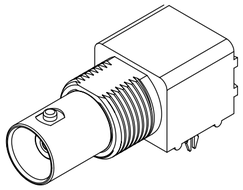

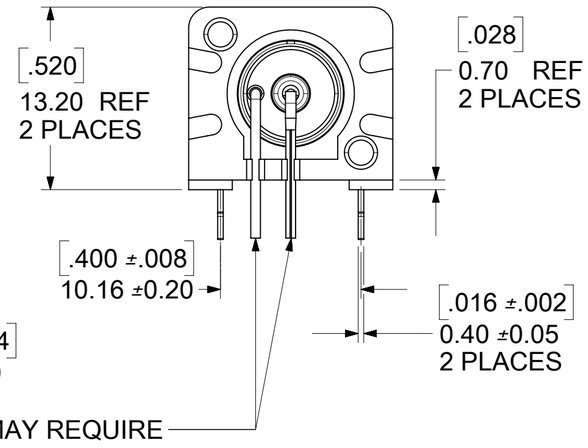

SIGNAL & GROUND LEADS MAY REQUIRE
MANUAL ADJUSTMENT TO FIT RECOMMENDED
PCB PATTERN DURING INSTALLATION

73171-3061	TRAY PACK, JAM NUT BULK	INCLUDED
73171-3060	73100-0167, ONE PER BAG	NOT INCLUDED
73100-0167	TRAY PACK	NOT INCLUDED
PART NO.	PACKAGING	JAM NUT
		89611-0450

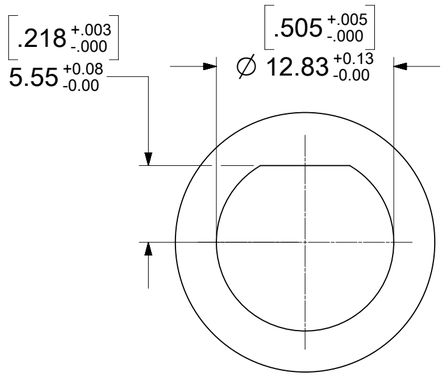

RECOMMENDED MOUNTING HOLE
RECOMMENDED MOUNTING
TORQUE: 0.56 N-m (5.0 IN-LBS)
PANEL THICKNESS: 5.5 (.217) MAX

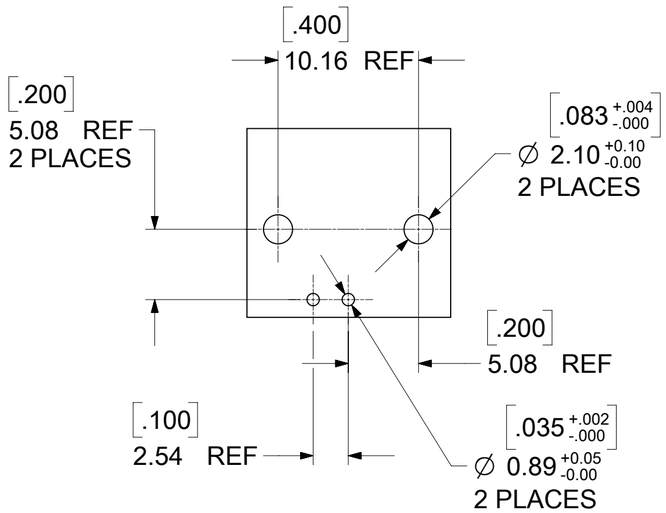

RECOMMENDED PCB LAYOUT

PS-89675-1030	ELECTRO/MECH PERFORM
SPECIFICATION	DESCRIPTION

REV	DATE	DESCRIPTION
B6	2018/4/18	ADD NOTE ON REAR VIEW

DOCUMENT STATUS	P1	RELEASE DATE	2018/04/25	06:41:17

SYMBOLS: = 0 (A, C, B, S, ▼, C, ☒, ■, V)

THIS DRAWING CONTAINS INFORMATION THAT IS PROPRIETARY TO MOLEX ELECTRONIC TECHNOLOGIES, LLC AND SHOULD NOT BE USED WITHOUT WRITTEN PERMISSION

DIMENSION UNITS: HYBRID
SCALE: 1:1
GENERAL TOLERANCES (UNLESS SPECIFIED)
ANGULAR TOL ± °
4 PLACES ±
3 PLACES ±
2 PLACES ±
1 PLACE ±
0 PLACES ±
DRAFT WHERE APPLICABLE MUST REMAIN WITHIN DIMENSIONS

CURRENT REV DESC:
EC NO: 175171
DRWN: JSU18 2018/04/18
CHK'D: YCHENG 2018/04/25
APPR: YCHENG 2018/04/25
INITIAL REVISION:
DRWN: TFLAHERTY 2007/05/01
APPR: GHUBBARD 1991/08/21

THIRD ANGLE PROJECTION | DRAWING: C-SIZE | SERIES: 73100

molex

BNC JACK R/A PCB TH
COMMERCIAL 50 OHM BNC-J/RA/PCB

PRODUCT CUSTOMER DRAWING

DOCUMENT NUMBER	DOC TYPE	DOC PART	REVISION
SD-73100-0167	PSD	001	B6

MATERIAL NUMBER | CUSTOMER: GENERAL MARKET | SHEET NUMBER: 1 OF 1

FORMAT: master-tb-prod-C
REVISION: H
DATE: 2018/01/18