MATERIALS AND FINISHES:

BODY ZINC ALLOY
SEE TABLE

INSULATOR TEFLON

CONTACT (MATING END) BERYLLIUM COPPER
PLATED GOLD

CONTACT (PCB END) BRASS
PLATED GOLD

COVER BRASS
SEE TABLE

PACKAGING SEE TABLE

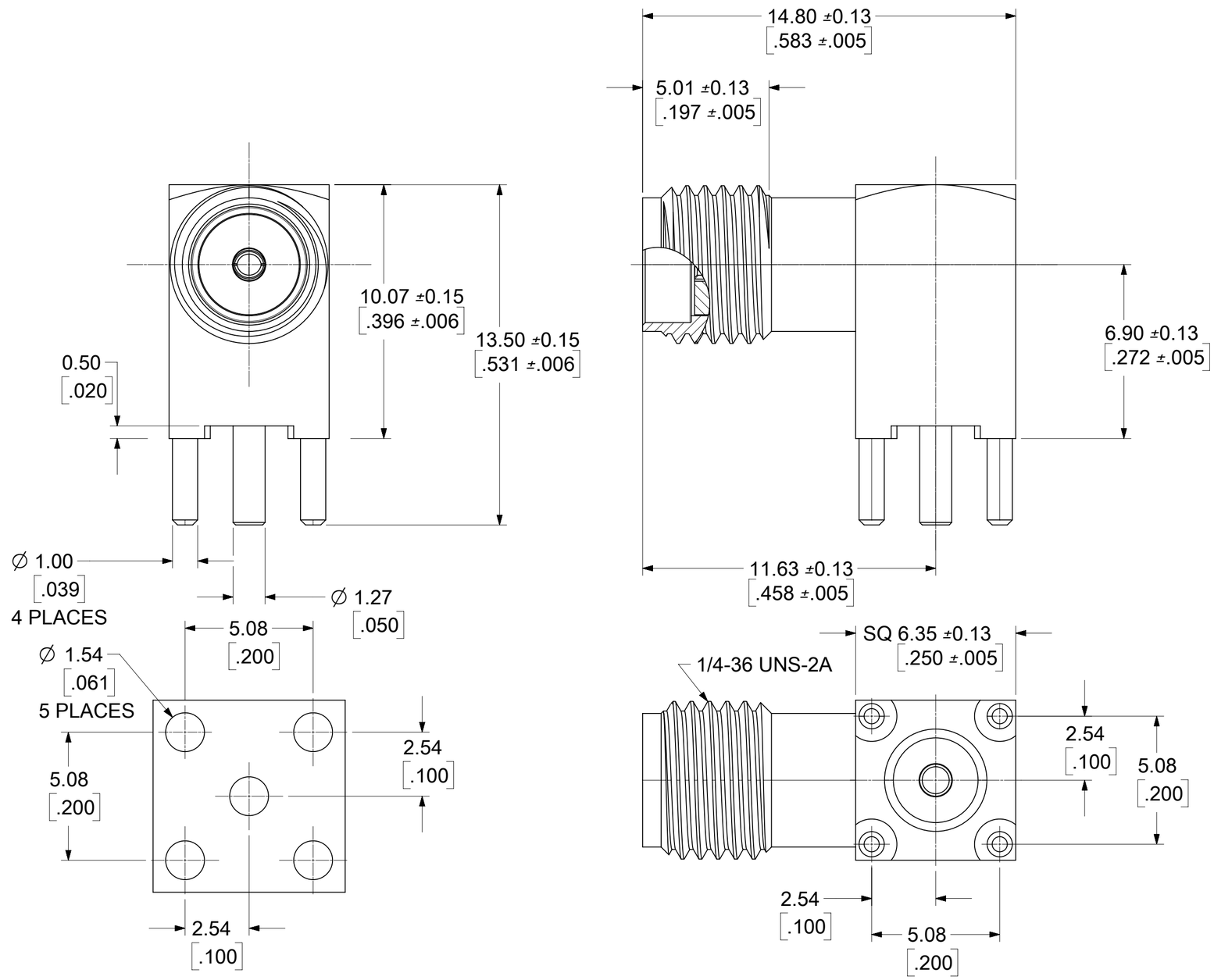

73391-0083	BODY, PIN, AND COVER PLATED GOLD 1u" MIN	73391-0083 TRAY (80 CAV.)
73391-0082	BODY, AND COVER PLATED NICKEL	73391-0080 TRAY (20 CAV.)
73391-0081	BODY, PIN, AND COVER PLATED GOLD 10u" MIN	73391-0081 TRAY (80 CAV.)
73391-0080	BODY, AND COVER PLATED NICKEL	73391-0080 TRAY (80 CAV.)
PART NO.	DESCRIPTION	PACHAGING

PS-73598-0111	SPECIFICATION
MIL-STD-348A, FIG. 310.1	INTERFACE
SPECIFICATION	DESCRIPTION

REV	DATE	DESCRIPTION
A6	2019/09/12	ADD DIM TOLERANCE PER EWR #13344-A

DOCUMENT STATUS	P1	RELEASE DATE	2019/10/17 06:51:23

SYMBOLS: F/A = 0; F/C = 0; F/P = 0; S = 0; ▼ = 0; C = 0; ☒ = 0; ■ = 0; V = 0

THIS DRAWING CONTAINS INFORMATION THAT IS PROPRIETARY TO MOLEX ELECTRONIC TECHNOLOGIES, LLC AND SHOULD NOT BE USED WITHOUT WRITTEN PERMISSION

DIMENSION UNITS: HYBRID
SCALE: 1:1
GENERAL TOLERANCES (UNLESS SPECIFIED)
ANGULAR TOL ± 2.0 °
4 PLACES ±
3 PLACES ±
2 PLACES ±
1 PLACE ±
0 PLACES ±
DRAFT WHERE APPLICABLE MUST REMAIN WITHIN DIMENSIONS

CURRENT REV DESC:
EC NO: 625774
DRWN: JSU18 2019/10/16
CHK'D: YCHENG 2019/10/17
APPR: YCHENG 2019/10/17
INITIAL REVISION:
DRWN: RFC_PLMIMP 2018/01/09
APPR: MHUANG 2006/08/29

THIRD ANGLE PROJECTION
DRAWING: C-SIZE
SERIES: 73391

molex

SMA JACK R/A
PCB TH 50 OHMS SMA-J/PCB

PRODUCT CUSTOMER DRAWING

DOCUMENT NUMBER	DOC TYPE	DOC PART	REVISION
SD-73391-008	PSD	001	A6

MATERIAL NUMBER	CUSTOMER	SHEET NUMBER
	GENERAL MARKET	1 OF 1

FORMAT: master-tb-prod-C
REVISION: H
DATE: 2018/01/18