MATERIALS AND FINISHES

COUPLING NUT, CAP BRASS
PLATED NICKEL

GASKET SILICONE RUBBER

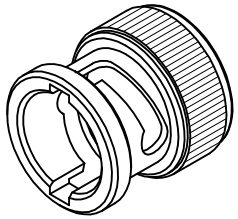

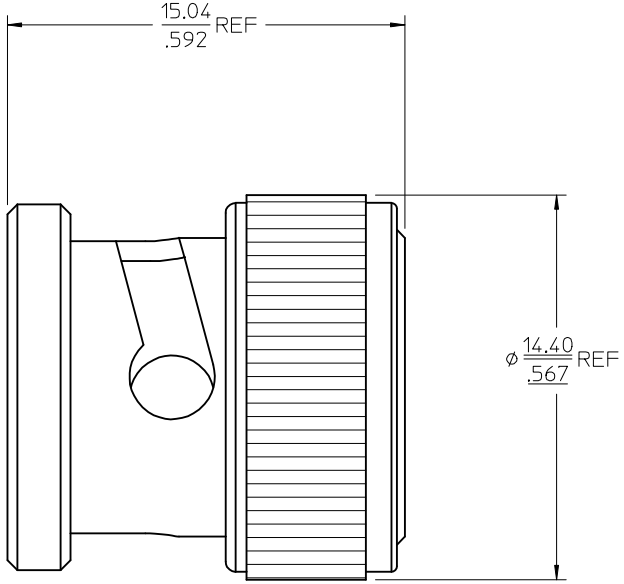

73415-1961	73415-1960, ONE PER BAG
73415-1960	POLY BAG
PART NO.	PACKAGING

CHG: -1960 POLY BAG
WAS BULK
PER RF15-E15-279
EC NO: URF2016-0091 2015/08/06
DRWN:CWE102
CH'KD: 2015/08/07
APPR:YCHENG
DESCRIPTION
REV

A2

QUALITY SYMBOLS
=0
=0
=0

GENERAL TOLERANCES (UNLESS SPECIFIED)

	mm	INCH
4 PLACES	± ---	± ---
3 PLACES	± ---	± ---
2 PLACES	± ---	± ---
1 PLACE	± ---	± ---
0 PLACE	±	±

ANGULAR ± 2 °

DRAFT WHERE APPLICABLE MUST REMAIN WITHIN DIMENSIONS

DIMENSION STYLE: MM/IN

SCALE

DESIGN UNITS: METRIC

THIRD ANGLE PROJECTION

DRAWN BY	AZR	DATE 2003/08/12
CHECKED BY	JDW	DATE 2003/08/12
APPROVED BY	GMH	DATE 2003/08/12

TITLE: BNC PLUG, DUST CAP
EWR-2143
BNC-M

molex

MATERIAL NO.: SEE TABLE

DOCUMENT NO.: SD-73415-196

SHEET NO.: 1 OF 1

SIZE: C

THIS DRAWING CONTAINS INFORMATION THAT IS PROPRIETARY TO MOLEX INCORPORATED AND SHOULD NOT BE USED WITHOUT WRITTEN PERMISSION