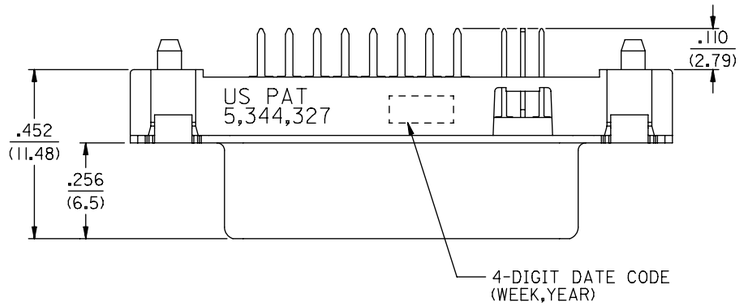

NOTES:

1. MATERIAL:
   SHIELD: DEEP DRAW STEEL;
   HOUSING: LCP, UL94V-0, NATURAL (WHITE);
   CONTACT: COPPER ALLOY.
2. PLATING:
   OUTER SHIELD: 60u"/(1.5um) MIN. SOLDERABLE NICKEL OVER 30u"/(0.75um) MIN. COPPER OVERALL.
   0.075"/(1.91mm) CONTACTS: SELECT GOLD FLASH AND 100u"/(2.50um) MIN. SELECT PURE TIN OVER 50u"/(1.27um) MIN. NICKEL OVERALL.
   0.100"/(2.54mm) CONTACTS: SELECT GOLD FLASH AND 100u"/(2.50um) MIN. SELECT PURE TIN OVER 50u"/(1.27um) MIN. NICKEL OVERALL.
3. PRODUCT CONFORMS TO MOLEX PRODUCT SPECIFICATION NUMBER PS-74320-001.
4. PARTS WILL BE PACKAGED IN TRAYS PER PK-74320-010.
5. PRODUCT CONFORMS TO DDWG DVI SPECIFICATION. REFER TO THIS SPECIFICATION FOR CONNECTOR MATING DIMENSIONS.
6. REFER TO PRODUCT SPECIFICATION NUMBER PS-74320-001 FOR THIS APPLICATION TORQUE REQUIREMENT.

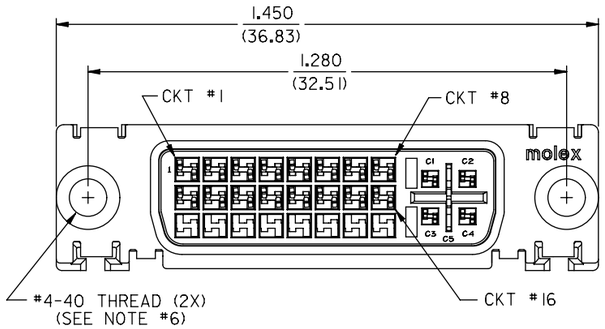

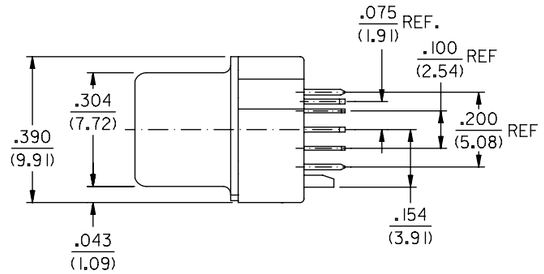

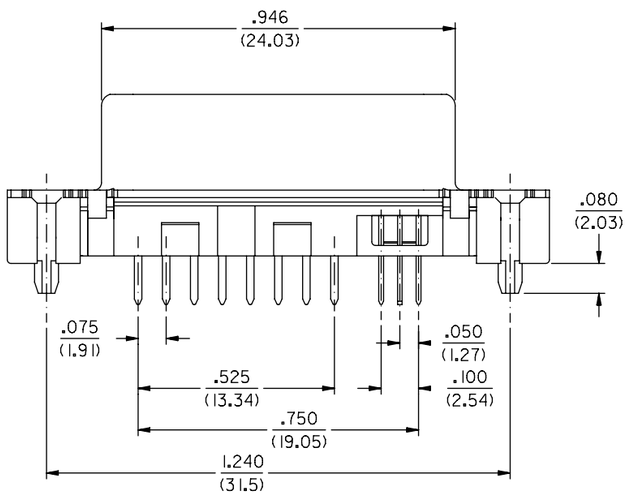

QUALITY SYMBOLS	
FA	= 0
FC	= 0
FP	= 0
▼	= 0
C	= 0
☒	= 0
▤	= 0
C	= 0

THIS DRAWING CONTAINS INFORMATION THAT IS PROPRIETARY TO MOLEX ELECTRONIC TECHNOLOGIES, LLC AND SHOULD NOT BE USED WITHOUT WRITTEN PERMISSION

EC NO:	DRWN:	CHK'D:	APPR:	DATE	DESCRIPTION
118825	XQZHANG	XQZHANG	AYIN	2016/08/17 2016/08/16 2017/07/10	CHANGE SHELL PLATING

REV: E

GENERAL TOLERANCES (UNLESS SPECIFIED)

ANGULAR TOL	±	1.0 °
4 PLACES	±	0.01
3 PLACES	±	0.01
2 PLACES	±	0.01
1 PLACE	±	
0 PLACES	±	

DRAFT WHERE APPLICABLE MUST REMAIN WITHIN DIMENSIONS

DIMENSION UNITS	INCH
SCALE	1:1
DRWN BY	XQZHANG
DATE	2014/12/11
CHK'D BY	XQZHANG
DATE	2014/12/10
APPR BY	AYIN
DATE	2015/02/09
DRAWING SIZE	A3
THIRD ANGLE PROJECTION	

molex®

DVI - A VERTICAL
RECEPTACLE ASSEMBLY, FOR ADAPTER

PRODUCT CUSTOMER DRAWING

SERIES	MATERIAL NUMBER	CUSTOMER
74320	74320-6001	GENERAL MARKET

DOCUMENT NUMBER	DOC TYPE	DOC PART	SHEET NUMBER
SD-74320-014	PSD	000	1 OF 1

RELEASE STATUS		RELEASE DATE	

FORMAT: master-tb-prod-A3
REVISION: G
DATE: 2015/12/14