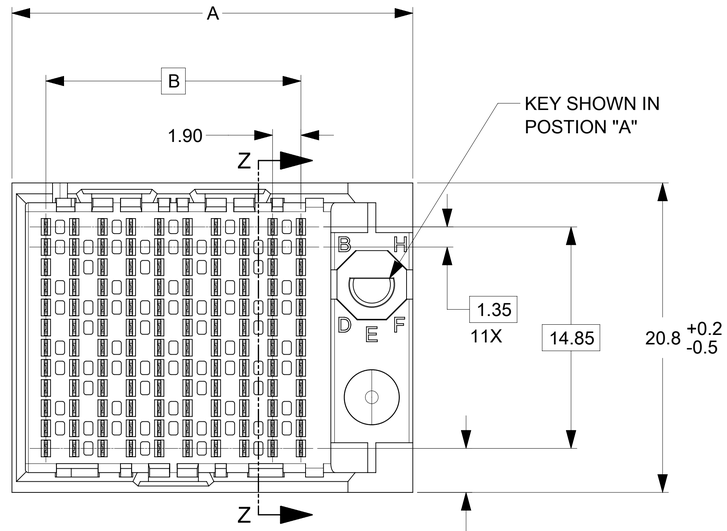

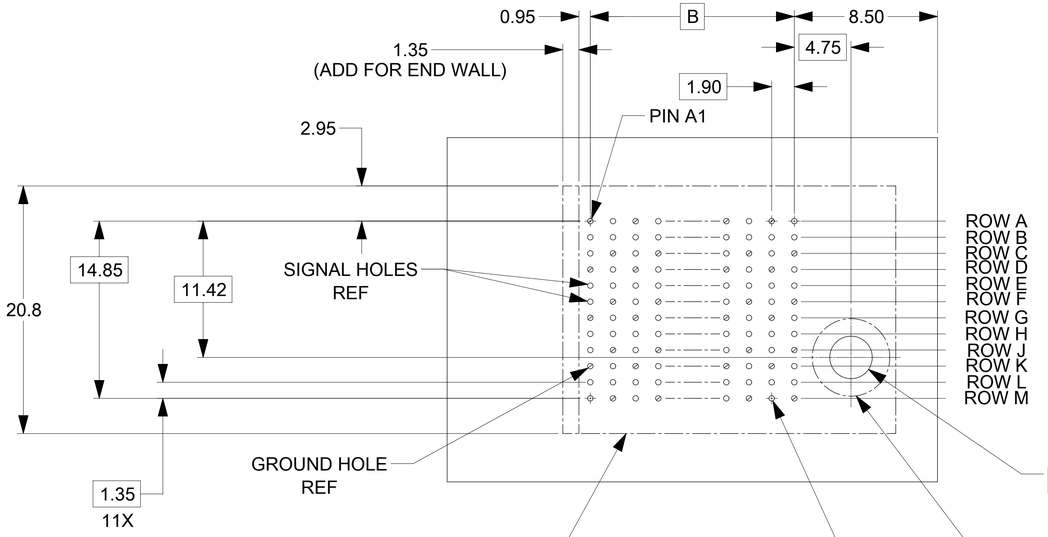

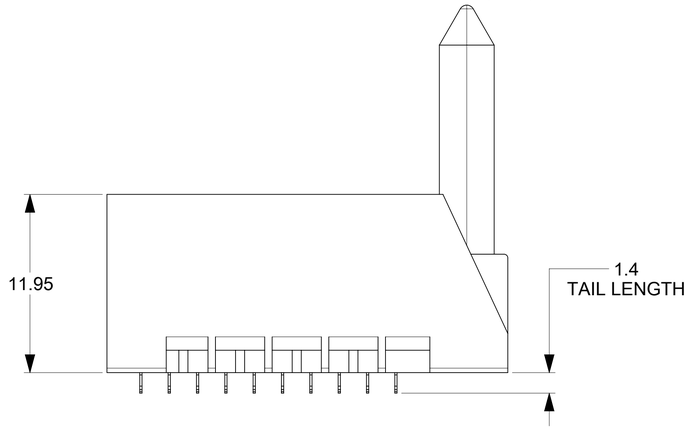

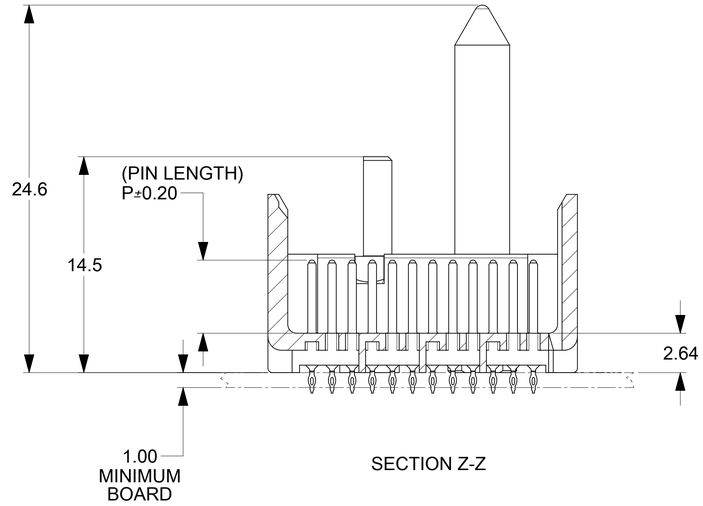

SECTION Z-Z

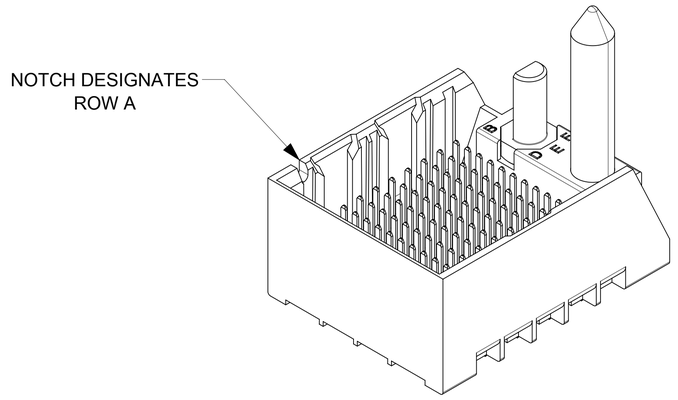

NOTES:

1. MATERIALS: HOUSING - LIQUID CRYSTAL POLYMER (LCP)
   GLASS-FILLED, UL94V-0
   TERMINALS - HIGH PERFORMANCE COPPER ALLOY
2. FINISH: 30µ MIN GOLD IN CONTACT AREA.
   SELECTIVE TIN ON PCB TAILS.
   NICKEL OVERALL.
3. REFER TO MOLEX PRODUCT SPECIFICATION PS-76060-999
   FOR PERFORMANCE SPECIFICATIONS AND ADDITIONAL PCB INFORMATION.
4. THIS PART CONFORMS TO CLASS B REQUIREMENTS OF
   MOLEX COSMETIC SPEC PS-45499-002.
5. PACKAGE PER: PK-70873-757.
6. SEE SHEETS 2 & 3 FOR PART NUMBERS AND BOARD RELATIONSHIPS.
7. FOR GROUNDED GUIDE PINS USE DIA. 3.56 +/-0.08 (PTH)
   DIA. 3.66 (DRILL) AND DIA 6.5 (PAD).
8. MATES WITH IMPACT DC SERIES NO. 76160.
9. KEEP OUT ZONE FOR BP HOUSING LENGTH INCLUDES AN ADDITIONAL 1.0MM
   TO ACCOMMODATE FOR SPACE REQUIRED BY DC FRONT HOUSING.
10. REFER TO MOLEX PCB ROUTING GUIDE AS-76060-990 FOR ANTIPAD AND ROUTING RECOMMENDATIONS.
11. CONNECTORS SUPPLIED WITH A 2-56 UNC-2A SCREW.
12. "THESE DIMENSIONS REPRESENT THE AREA NEEDED TO ACCOMMODATE CONNECTOR INSERTION AND
    REPAIR ON THE PC BOARD. THIS IS REFERRED TO AS THE "CONNECTOR KEEP OUT ZONE" AND
    DOES NOT REPRESENT THE ACTUAL PERIMETER OF THE CONNECTOR. WHEN LAYING OUT A PC BOARD
    FOR CONNECTORS STACKED TOGETHER, USE A 1.9mm PROGRESSION."

RELEASE STATUS	P1	RELEASE DATE	18.10.2017	06:14:37

QUALITY SYMBOLS: F A = 0; F C = 0; F D = 0; = 0; C = 0; = 0; = 0; G = 0

THIS DRAWING CONTAINS INFORMATION THAT IS PROPRIETARY TO MOLEX ELECTRONIC TECHNOLOGIES, LLC AND SHOULD NOT BE USED WITHOUT WRITTEN PERMISSION

REV		
G1	MIGRATED TO NX	2017/09/25
	EC NO: 123322	2017/10/16
	DRWN: NMUNIVENKATA	2017/10/18
	CHK'D: PRAMASWAMY	
	APPR: PRAMASWAMY	

GENERAL TOLERANCES (UNLESS SPECIFIED)

ANGULAR TOL ±	0.5 °
4 PLACES	±
3 PLACES	±
2 PLACES	± 0.13
1 PLACE	± 0.25
0 PLACES	±

DRAFT WHERE APPLICABLE MUST REMAIN WITHIN DIMENSIONS

DIMENSION UNITS	mm
SCALE	5:1
DRWN BY	TIBARRA
DATE	2012/11/26
CHK'D BY	JBINGHAM
DATE	2012/12/18
APPR BY	SMILLER
DATE	2012/12/31
DRAWING SIZE	D
	THIRD ANGLE PROJECTION

molex®

IMPACT 4 PAIR HEADER
RIGHT GUIDED ASSEMBLY SALES DRAWING

PRODUCT CUSTOMER DRAWING

SERIES	MATERIAL NUMBER	CUSTOMER
76155	SEE TABLE	GENERAL MARKET

DOCUMENT NUMBER	DOC TYPE	DOC PART	SHEET NUMBER
SD-76155-003	PSD	001	1 OF 3

PART NUMBER TABLE

MATERIAL NUMBER	# OF COLUMNS	# OF DIFF PAIR	DIM "A"	DIM "B"	
76155-*3**	6	24	19.3	9.50	GUIDE RIGHT END WALL OPTION
76155-*8**	8	32	23.1	13.30	
76155-*1**	10	40	26.9	17.10	
76155-*6**	16	64	38.3	28.50	

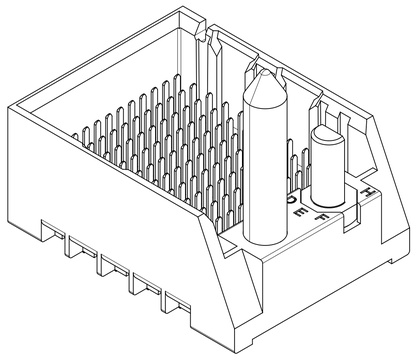

GUIDE RIGHT
END WALL OPTION

MATERIAL NUMBER	# OF COLUMNS	# OF DIFF PAIR	DIM "A"	DIM "B"	
76155-*3**	6	24	17.9	9.50	GUIDE RIGHT OPEN WALL OPTION
76155-*8**	8	32	21.7	13.30	
76155-*1**	10	40	25.5	17.10	
76155-*6**	16	64	36.9	28.50	

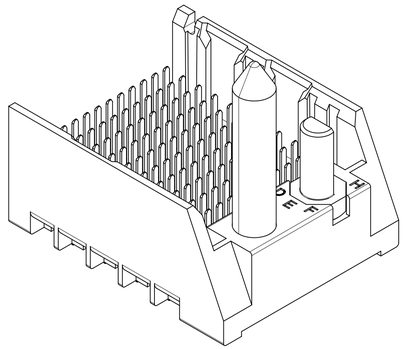

GUIDE RIGHT
OPEN WALL OPTION

PART NUMBER LOGIC

76155-****

MODULE TYPE
5 = GUIDE RIGHT, TIN
9 = GUIDE RIGHT END WALL, TIN

MODULE TYPE
1 = 10 COL
3 = 6 COL
6 = 16 COL
8 = 8 COL

KEY ORIENTATION
0 = NO KEY
1 = A
2 = B
3 = C
4 = D
5 = E
6 = F
7 = G
8 = H

PIN LENGTH (P)
3 = 4.50 (SHORT COMPLIANT, 0.46±0.05 PTH)
4 = 4.90 (SHORT COMPLIANT, 0.46±0.05 PTH)
5 = 5.50 (SHORT COMPLIANT, 0.46±0.05 PTH)
6 = 4.50 (MICRO COMPLIANT, 0.39±0.05 PTH)
7 = 4.90 (MICRO COMPLIANT, 0.39±0.05 PTH)
8 = 5.50 (MICRO COMPLIANT, 0.39±0.05 PTH)

QUALITY SYMBOLS
= 0
= 0
= 0
= 0
= 0
= 0
= 0
= 0

THIS DRAWING CONTAINS INFORMATION THAT IS PROPRIETARY TO MOLEX ELECTRONIC TECHNOLOGIES, LLC AND SHOULD NOT BE USED WITHOUT WRITTEN PERMISSION

EC NO: 123322 MIGRATED TO NX 2017/09/25
DRWN: NMUNIVENKATA 2017/10/16
CH'KD: PRAMASWAMY
APPR: PRAMASWAMY 2017/10/18
REV G1

GENERAL TOLERANCES (UNLESS SPECIFIED)

ANGULAR TOL ± 0.5 °	
4 PLACES	±
3 PLACES	±
2 PLACES	± 0.13
1 PLACE	± 0.25
0 PLACES	±

DRAFT WHERE APPLICABLE MUST REMAIN WITHIN DIMENSIONS

DIMENSION UNITS: mm
SCALE: 4:1
DRWN BY: TIBARRA DATE: 2012/11/26
CHK'D BY: JBINGHAM DATE: 2012/12/18
APPR BY: SMILLER DATE: 2012/12/31
DRAWING SIZE: D
THIRD ANGLE PROJECTION

molex®

IMPACT 4 PAIR HEADER
RIGHT GUIDED ASSEMBLY SALES DRAWING

PRODUCT CUSTOMER DRAWING

SERIES	MATERIAL NUMBER	CUSTOMER
76155	SEE TABLE	GENERAL MARKET

DOCUMENT NUMBER	DOC TYPE	DOC PART	SHEET NUMBER
SD-76155-003	PSD	001	2 OF 3

RELEASE STATUS	P1	RELEASE DATE	18.10.2017 06:14:37

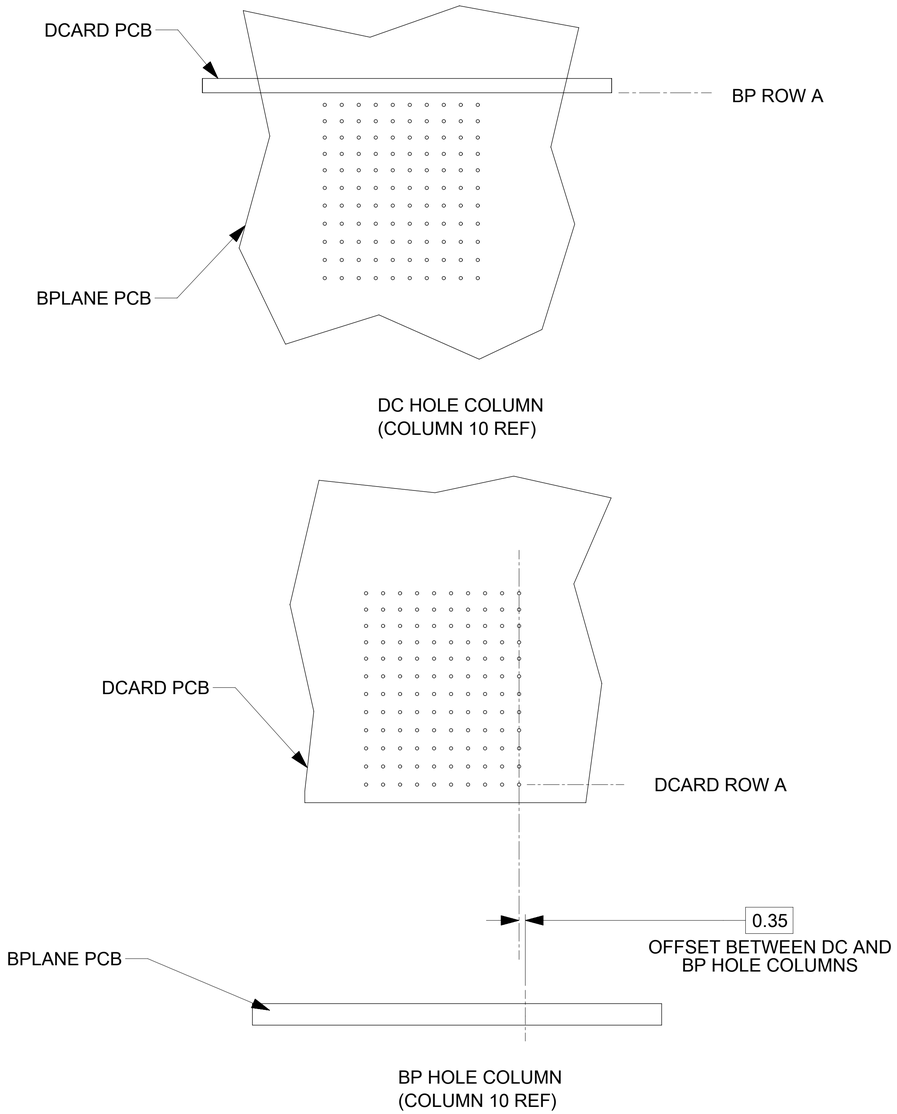

IMPACT 4 PAIR
BOARD RELATIONSHIPS

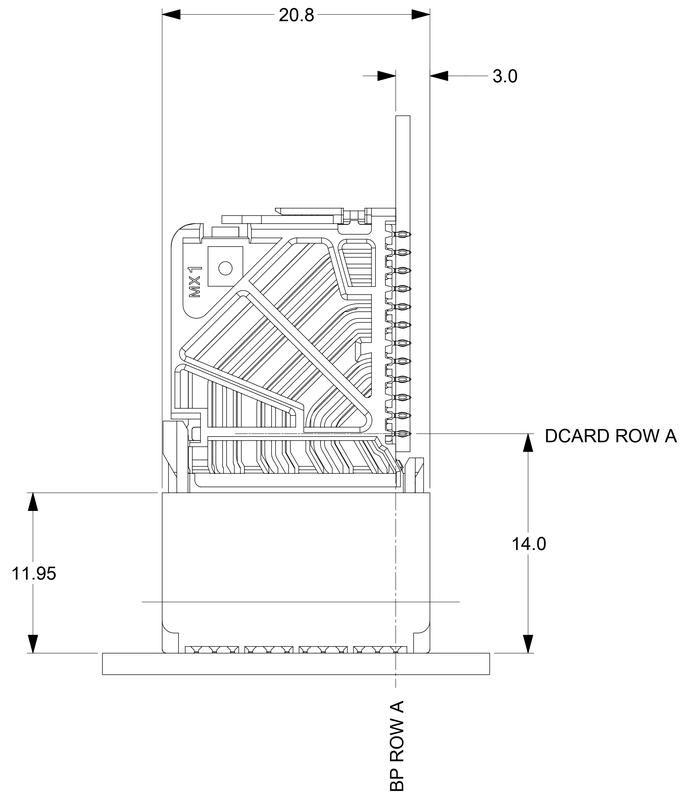

QUALITY SYMBOLS	
FA	= 0
FC	= 0
FD	= 0
▼	= 0
C	= 0
☒	= 0
■	= 0
C	= 0

THIS DRAWING CONTAINS INFORMATION THAT IS PROPRIETARY TO MOLEX ELECTRONIC TECHNOLOGIES, LLC AND SHOULD NOT BE USED WITHOUT WRITTEN PERMISSION

MIGRATED TO NX
EC NO: 123322 2017/09/25
DRWN: NMUNIVENKATA 2017/10/16
CHK'D: PRAMASWAMY 2017/10/18
APPR: PRAMASWAMY

REV G1

GENERAL TOLERANCES (UNLESS SPECIFIED)

ANGULAR TOL ±	0.5 °
4 PLACES	±
3 PLACES	±
2 PLACES	± 0.13
1 PLACE	± 0.25
0 PLACES	±

DRAFT WHERE APPLICABLE MUST REMAIN WITHIN DIMENSIONS

DIMENSION UNITS	SCALE
mm	1:1

DRWN BY	DATE
TIBARRA	2012/11/26
CHK'D BY	DATE
JBINGHAM	2012/12/18
APPR BY	DATE
SMILLER	2012/12/31

DRAWING SIZE: D
THIRD ANGLE PROJECTION

molex®

IMPACT 4 PAIR HEADER
RIGHT GUIDED ASSEMBLY SALES DRAWING

PRODUCT CUSTOMER DRAWING

SERIES	MATERIAL NUMBER	CUSTOMER
76155	SEE TABLE	GENERAL MARKET

DOCUMENT NUMBER	DOC TYPE	DOC PART	SHEET NUMBER
SD-76155-003	PSD	001	3 OF 3

RELEASE STATUS	P1	RELEASE DATE	18.10.2017	06:14:37