MATERIAL NUMBER	WIRE AWG	INSUL DIA O.D.
845080001	18-14	.053[1.35] - .134[3.40]

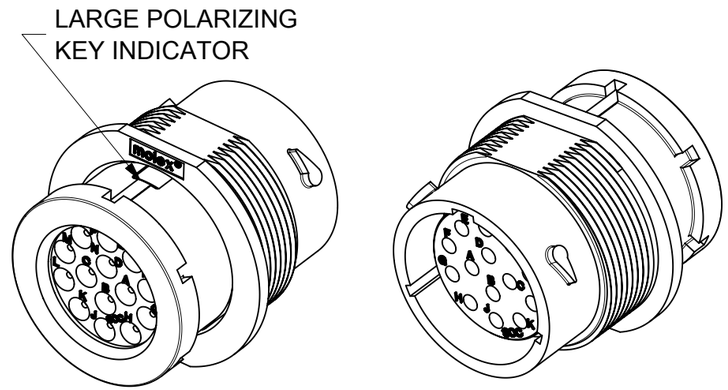

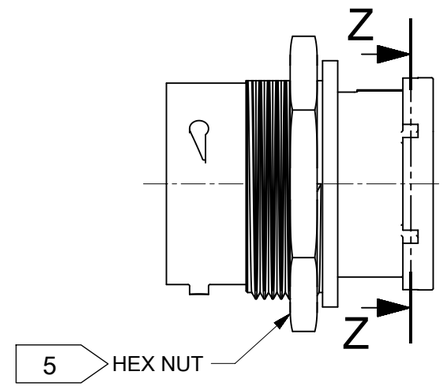

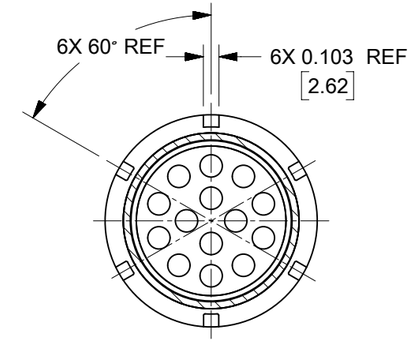

SECTION Z-Z

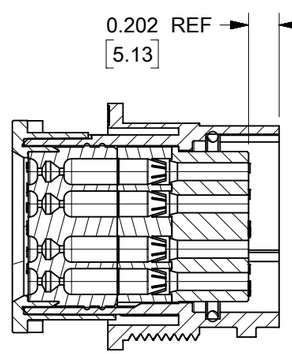

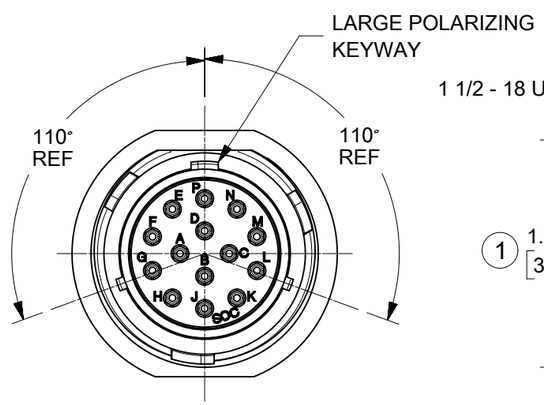

SECTION AA-AA

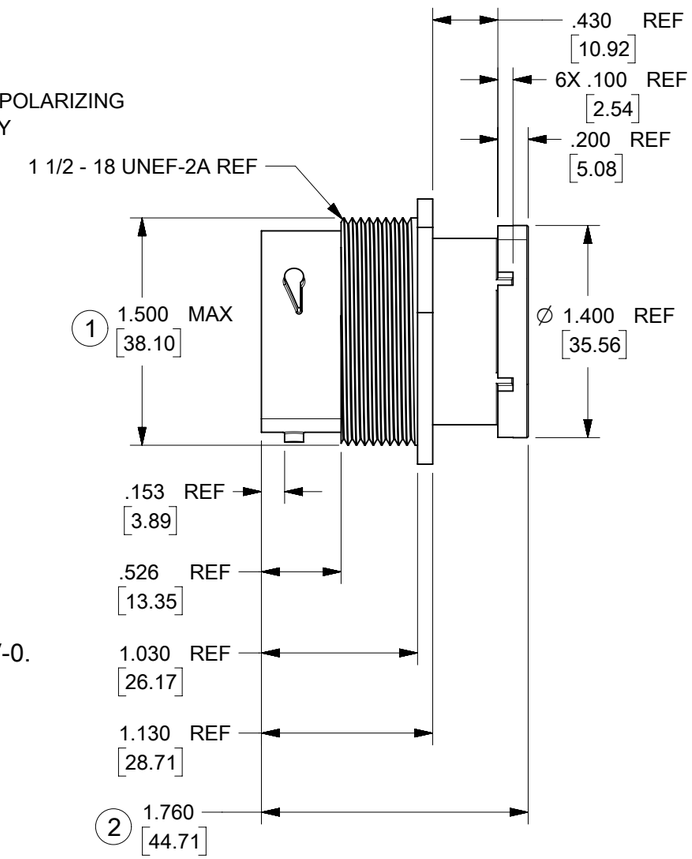

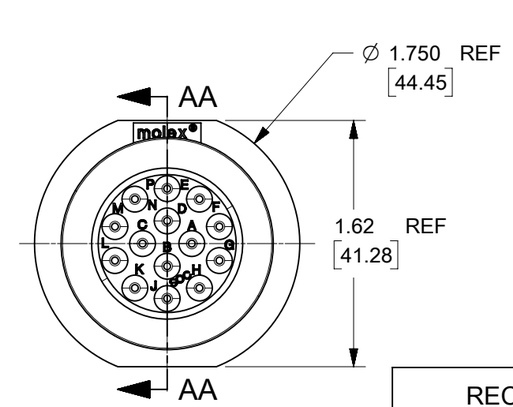

WIRE ENTRY VIEW

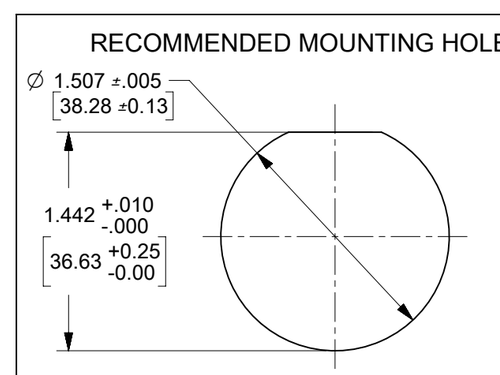

NOTES:

1. MATERIALS:
   HOUSINGS: POLYESTER (PBT), GLASS FILLED,
   UL94V-0 & POLYETHERIMIDE (PEI), UNFILLED, UL94V-0.
   COLOR, UNLESS OTHERWISE SPECIFIED: BLACK
   SEALS: SILICONE RUBBER
   COLOR: RUST RED
2. PRODUCT SPECIFICATION: PS-84501-001.
3. MATES WITH: SERIES 84501 PLUG CONNECTOR.
4. USE CONNECTOR WITH FEMALE CRIMP
   TERMINAL SERIES 84525.
5. HEX NUT SOLD SEPARATELY,
   OPTIONAL FOR PANEL MOUNTING.
   MOLEX MATERIAL NUMBER 845020004.
6. RECOMMENDED PANEL THICKNESS .062[1.58] TO .187[4.76]

LAST INSPECTION NUMBER: 2

THIS DRAWING CONTAINS INFORMATION THAT IS PROPRIETARY TO MOLEX ELECTRONIC TECHNOLOGIES, LLC AND SHOULD NOT BE USED WITHOUT WRITTEN PERMISSION

DIMENSION UNITS	SCALE
HYBRID	1:1

GENERAL TOLERANCES (UNLESS SPECIFIED)

	MM	INCH
4 PLACES	±	±
3 PLACES	±	± 0.015
2 PLACES	± 0.38	± 0.02
1 PLACE	± 0.5	±
0 PLACES	±	±
ANGULAR TOL	± 1.0 °	

DRAFT WHERE APPLICABLE MUST REMAIN WITHIN DIMENSIONS

CURRENT REV DESC:

EC NO: 623621
DRWN: AJOBRIEN 2019/08/07
CHK'D: IOCONNELL 2019/10/14
APPR: IOCONNELL 2019/10/16

INITIAL REVISION:
DRWN: DMYRICK 2006/06/26
APPR: RDEROSS 2006/06/26

THIRD ANGLE PROJECTION | DRAWING: B-SIZE | SERIES: 84508

molex

RECPT. CONNECTOR
ASSEMBLY, 18-14 POS SOCKET TERMINALS

PRODUCT CUSTOMER DRAWING

DOCUMENT NUMBER	DOC TYPE	DOC PART	REVISION
SD-84508-001	PSD	001	C2

MATERIAL NUMBER	CUSTOMER	SHEET NUMBER
SEE CHART	GENERAL MARKET	1 OF 1

DOCUMENT STATUS	P1	RELEASE DATE	2019/10/16 08:13:54

FORMAT: Eng-legal-prod-prod-B
REVISION: D
DATE: 2018/01/18