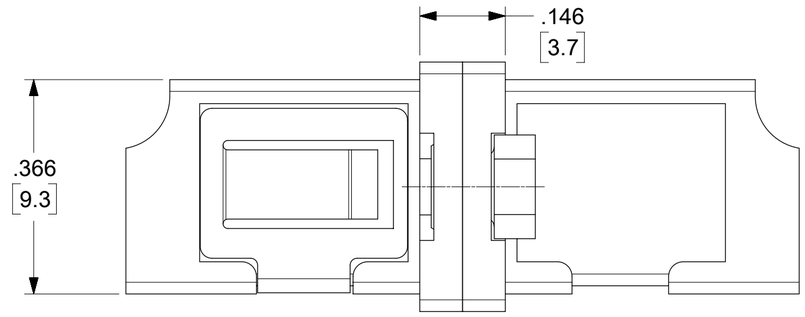

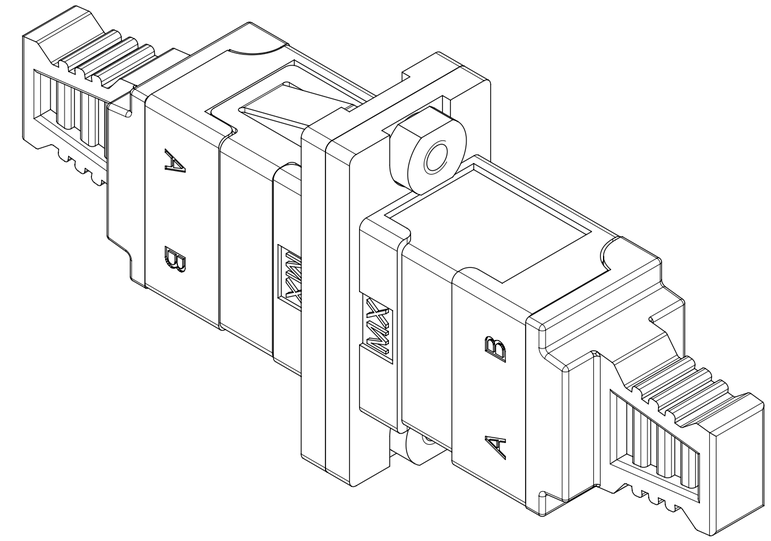

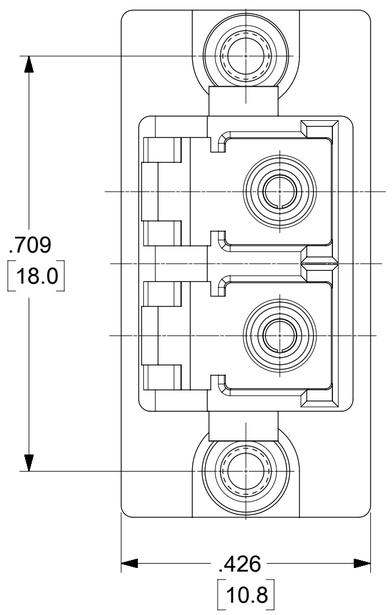

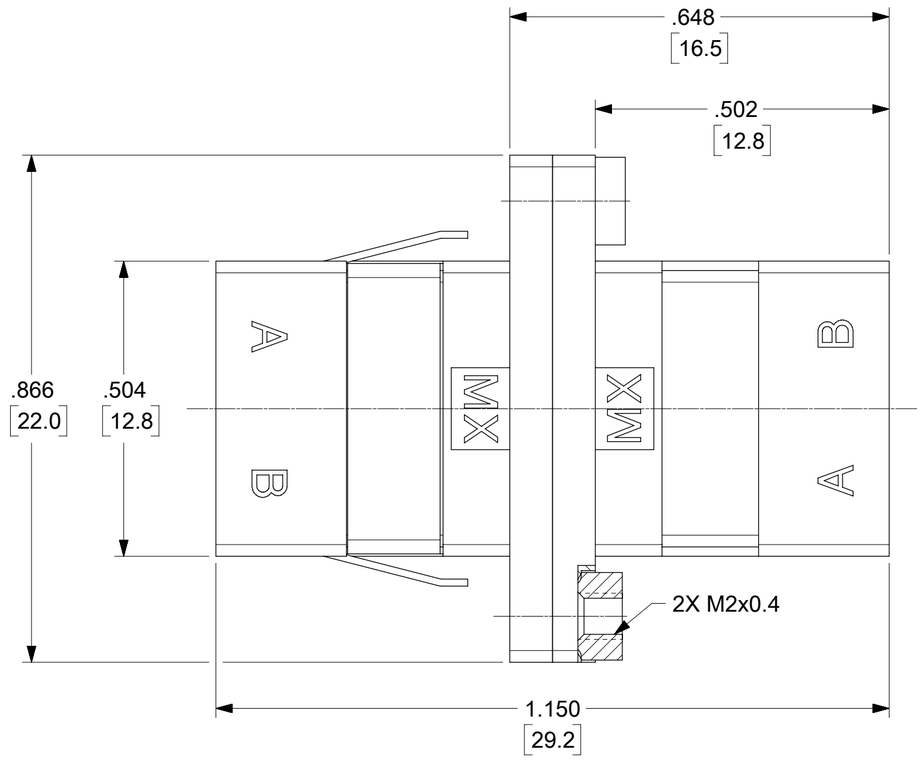

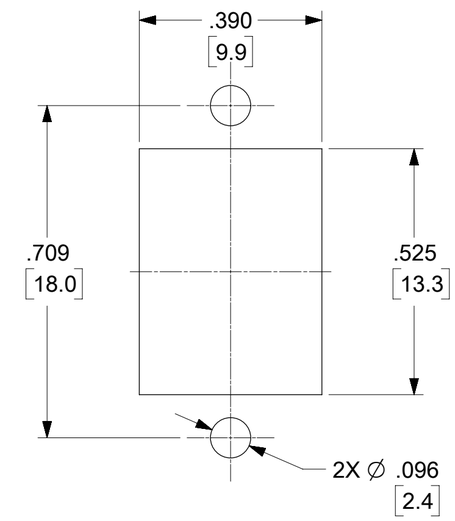

RECOMMENDED MOUNTING CUTOUT
FOR .063/1.60 THICK PANEL

NOTES:

1. ALL DIMENSIONS ARE FOR REFERENCE ONLY.
2. DUST CAPS ARE SHOWN IN ISOMETRIC VIEW ONLY.
3. SPLIT SLEEVE MATERIAL - PHOSPHOR BRONZE.
4. ADAPTERS ARE PACKED IN A TRAY.

THIS DRAWING CONTAINS INFORMATION THAT IS PROPRIETARY TO MOLEX ELECTRONIC TECHNOLOGIES, LLC AND SHOULD NOT BE USED WITHOUT WRITTEN PERMISSION

DIMENSION UNITS	SCALE
INCH/MM	5:1

GENERAL TOLERANCES (UNLESS SPECIFIED)

ANGULAR TOL	± 0.5 °
4 PLACES	±
3 PLACES	±
2 PLACES	±
1 PLACE	±
0 PLACES	±

DRAFT WHERE APPLICABLE MUST REMAIN WITHIN DIMENSIONS

CURRENT REV DESC:

EC NO: 619398
DRWN: IGUMIN 2019/03/20
CHK'D: WCHEN 2019/07/04
APPR: WCHEN 2019/07/04

INITIAL REVISION:
DRWN: IGUMIN 2009/05/21
APPR: IGUMIN 2009/05/21

THIRD ANGLE PROJECTION | DRAWING: C-SIZE | SERIES: 106126

molex

METAL LC DUPLEX ADAPTER
WITH SCREW MOUNT OPTION

PRODUCT CUSTOMER DRAWING

DOCUMENT NUMBER	DOC TYPE	DOC PART	REVISION
SD-106126-0790	PSD	001	C

MATERIAL NUMBER	CUSTOMER	SHEET NUMBER
1061260790	GENERAL MARKET	1 OF 1

DOCUMENT STATUS	P1	RELEASE DATE	2019/07/04 01:07:57

FORMAT: master-tb-prod-C
REVISION: H
DATE: 2018/01/18