| SL. No | PART NUMBER | PART DESCRIPTION |
|---|---|---|
| 1 | 202935-1000 | MULTICAT MID POWER MALE CRP 20-24 AWG, 0.2 µm min Au over 2µm min ductile Ni |
| 2 | 202935-2000 | MULTICAT MID POWER MALE CRP 26-28 AWG, 0.2 µm min Au over 2µm min ductile Ni |
| 3 | 202935-3000 | MULTICAT MID POWER MALE CRP 20-24 AWG, 1.3 µm min selective Au over 2µm min ductile Ni |
| 4 | 202935-4000 | MULTICAT MID POWER MALE CRP 26-28 AWG, 1.3 µm min selective Au over 2µm min ductile Ni |

AWG
20-24

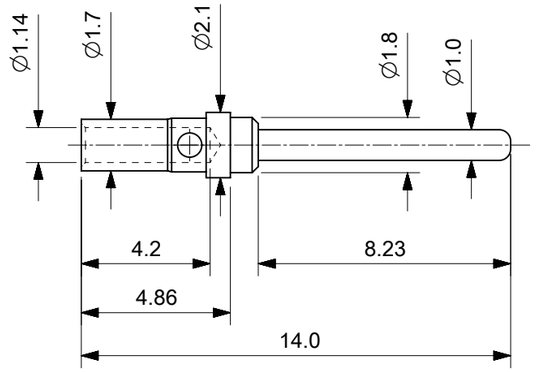


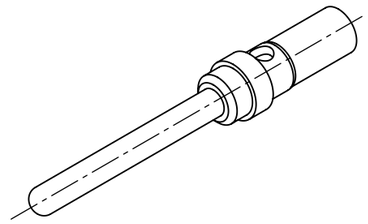

AWG
26-28

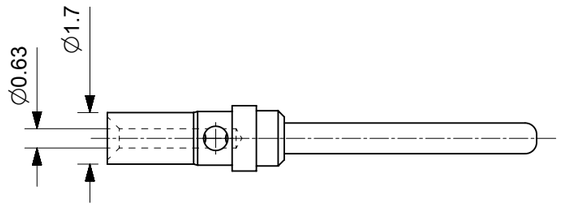


NOTE:
1. MATERIAL: BRASS
2. PLATING: REFER TABLE
3. PRODUCT SPECIFICATION : 2059250000-PS
4. APPLICATION SPECIFICATION: 2059250000-AS
5.TEST SUMMARY: 2059250000-TS
6. PACKAGING SPECIFICATION: 2029350000-PK
7. MATES WITH TERMINAL SERIES: 202936
8. USED WITH HOUSING SERIES: 205925
9. MAXIMUM ALLOWED WIRE DIAMETER IS 1.90mm FOR HOUSING.
10.RECOMMENDED TO USE INSERTION TOOL FOR TERMINAL INSERTION IN TO HOUSING CAVITY

RoHS compliant by exemption 6(c)

THIS DRAWING CONTAINS INFORMATION THAT IS PROPRIETARY TO MOLEX ELECTRONIC TECHNOLOGIES, LLC AND SHOULD NOT BE USED WITHOUT WRITTEN PERMISSION

SYMBOLS: E = 0; C = 0; B = 0; S = 0; ▼ = 0; C = 0; ☒ = 0; ■ = 0; V = 0

DIMENSION UNITS: mm
SCALE: 5:1
GENERAL TOLERANCES (UNLESS SPECIFIED)
ANGULAR TOL ± °
4 PLACES ±
3 PLACES ±
2 PLACES ± 0.2
1 PLACE ± 0.2
0 PLACES ±
DRAFT WHERE APPLICABLE MUST REMAIN WITHIN DIMENSIONS

CURRENT REV DESC:
EC NO: 611853
DRWN: MRAMAKRISHNA 2018/12/24
CHK'D: ISHWARG 2019/02/11
APPR: ISHWARG 2019/02/11
INITIAL REVISION:
DRWN: MRAMAKRISHNA 2018/12/24
APPR: ISHWARG 2019/02/11

THIRD ANGLE PROJECTION
DRAWING: A3-SIZE
SERIES: 202935

molex

MULTICAT MID POWER TERM MALE CRP

PRODUCT CUSTOMER DRAWING

| DOCUMENT NUMBER | DOC TYPE | DOC PART | REVISION |
|---|---|---|---|
| 2029350000-SD | PSD | 000 | A |

| MATERIAL NUMBER | CUSTOMER | SHEET NUMBER |
|---|---|---|
| SEE TABLE | GENERAL MARKET | 1 OF 1 |

| DOCUMENT STATUS | P1 | RELEASE DATE | 2019/02/11 17:42:22 |
|---|---|---|---|

FORMAT: tb-prod-A3
REVISION: H
DATE: 2018/01/18