PART NO.	Q' TY/REEL	REEL/BOX	SPQ	MOQ
2047110001	550 PCS	5	550 PCS	2750 PCS

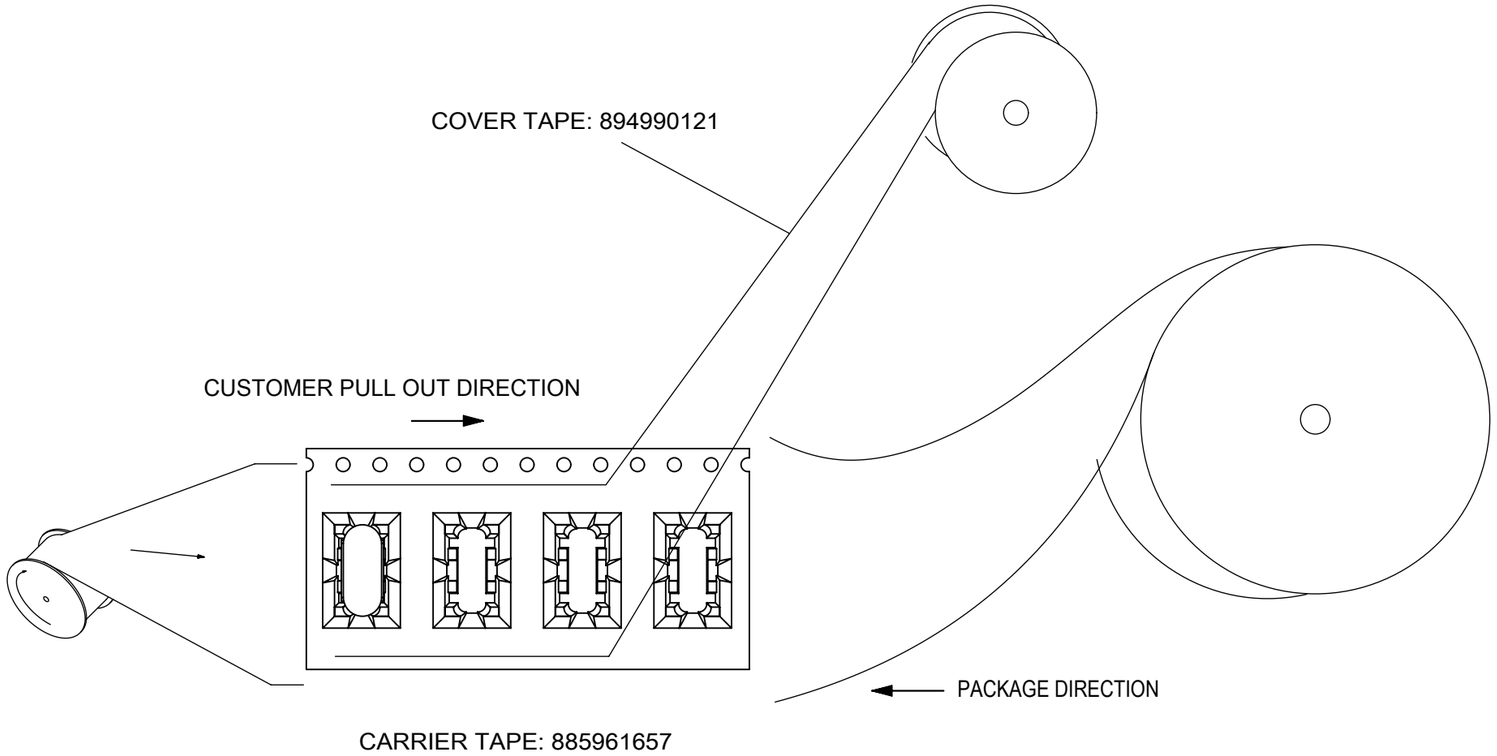

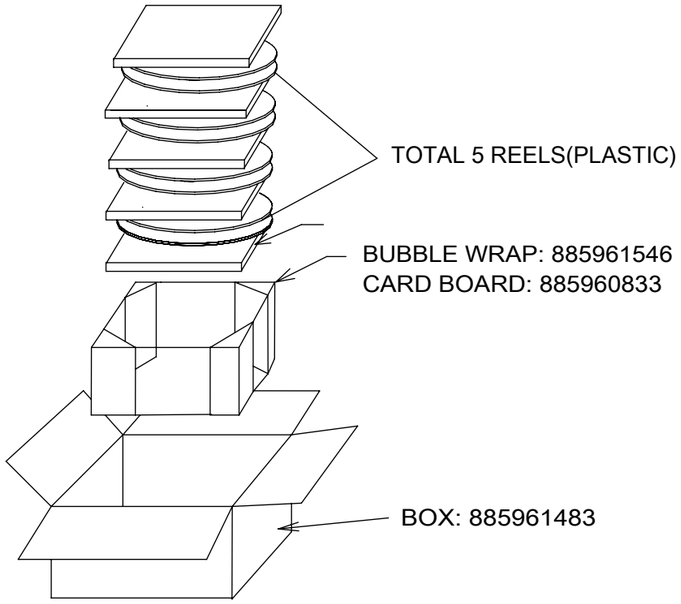

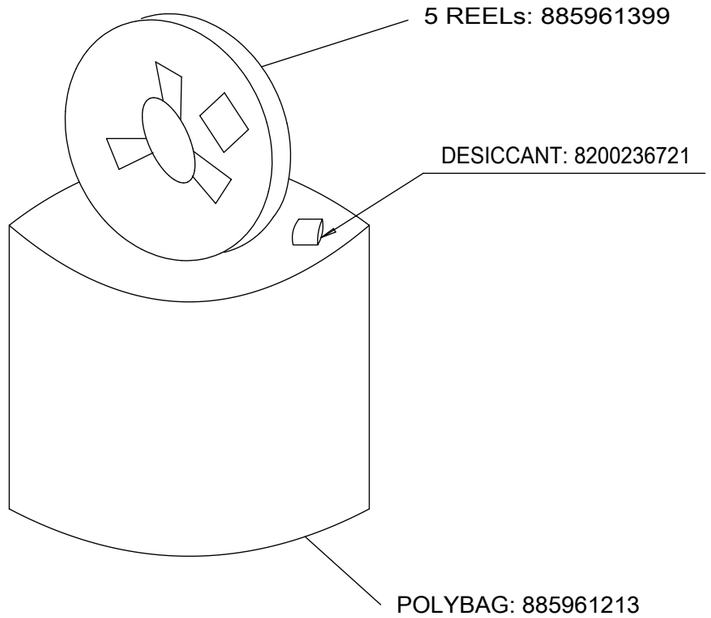

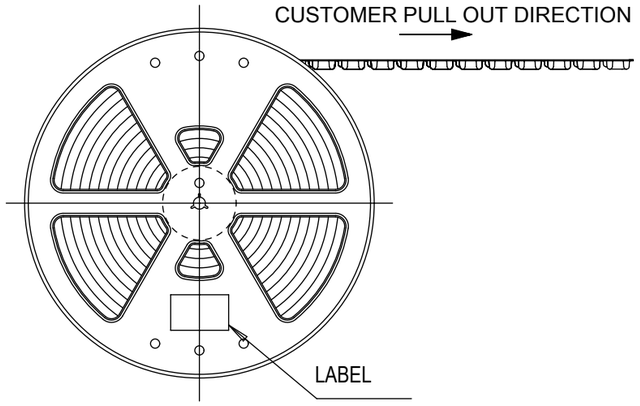

NOTES:

1. PACKING PER 15" REEL, 24mm CARRIER TAPE,
2. THE PEELING FORCE OF CARRIER TAPE :

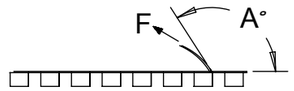

PEELING SPEED 300MM/MIN

A	165°~180°
F	0.1N~1.3N

3. USER DIRECTION OF FEED:

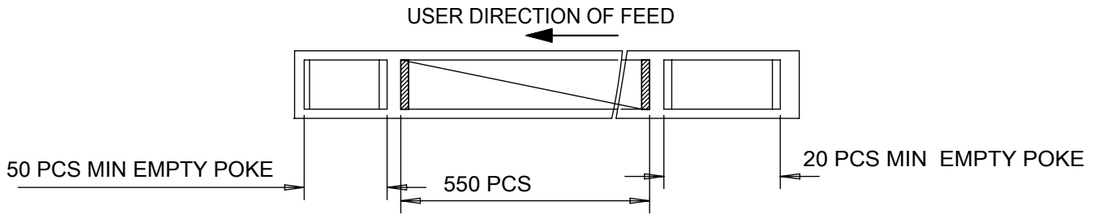

SYMBOLS	
= 0	
= 0	
= 0	
= 0	
= 0	
= 0	
= 0	
= 0	
= 0	

THIS DRAWING CONTAINS INFORMATION THAT IS PROPRIETARY TO MOLEX ELECTRONIC TECHNOLOGIES, LLC AND SHOULD NOT BE USED WITHOUT WRITTEN PERMISSION

DIMENSION UNITS	SCALE
mm	1:1

GENERAL TOLERANCES (UNLESS SPECIFIED)

ANGULAR TOL	± °
4 PLACES	±
3 PLACES	±
2 PLACES	±
1 PLACE	±
0 PLACES	±

DRAFT WHERE APPLICABLE MUST REMAIN WITHIN DIMENSIONS

CURRENT REV DESC: PROPOSED

EC NO: 619078
DRWN: RZHANG 2019/06/14
CHK'D: AYIN 2019/06/18
APPR: AYIN 2019/06/18

INITIAL REVISION:
DRWN: RZHANG 2018/02/08
APPR: AYIN 2018/03/27

THIRD ANGLE PROJECTION | DRAWING: A3-SIZE | SERIES: 204711

molex

PACKAGE SPEC FOR USB TYPE C 204711

PACKAGING DESIGN DRAWING

DOCUMENT NUMBER	DOC TYPE	DOC PART	REVISION
2047118888	PDD	000	A3

MATERIAL NUMBER	CUSTOMER	SHEET NUMBER
SEE CHART	GENERAL MARKETING	1 OF 1

DOCUMENT STATUS	P1	RELEASE DATE	2019/06/18 09:41:20

FORMAT: master-tb-prod-A3
REVISION: H
DATE: 2018/01/18