Part Number: 42817-0042
Status: Active
Overview: Mini-Fit Sr.™ Power Connectors
Description: Mini-Fit Sr.™ Crimp Terminal, Male, 14-16 AWG, Gold (Au)

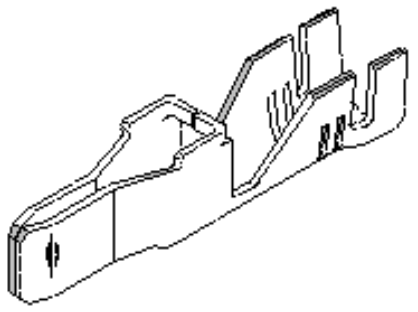

Series
image - Reference only

Documents:
Drawing (PDF)
Product Specification PS-42815-001 (PDF)
Packaging Specification PK-42815-001 (PDF)
RoHS Certificate of Compliance (PDF)

General

Product Family	Crimp Terminals
Series	42817
Application	Power
Comments	High Current/Low Force
Crimp Quality Equipment	Yes
Overview	Mini-Fit Sr.™ Power Connectors
Product Name	Mini-Fit Sr.™
UPC	756054457108

Physical

Gender	Male
Material - Metal	High Performance Alloy (HPA)
Material - Plating Mating	Gold
Material - Plating Termination	Tin
Net Weight	1.340/g
Packaging Type	Reel
Plating min - Mating	0.762µm
Plating min - Termination	2.540µm
Termination Interface: Style	Crimp or Compression
Wire Insulation Diameter	4.57mm max.
Wire Size AWG	14, 16
Wire Size mm²	N/A

Electrical

Current - Maximum per Contact	50A

Material Info

Reference - Drawing Numbers

Packaging Specification	PK-42815-001
Product Specification	PS-42815-001, RPS-42815-011, RPS-42815-012, RPS-42815-013, RPS-42815-014
Sales Drawing	SD-42817-020

EU RoHS
ELV and RoHS Compliant
REACH SVHC
Contains SVHC: No
Low-Halogen Status
Low-Halogen

China RoHS

Need more information on product environmental compliance?

Email productcompliance@molex.com
For a multiple part number RoHS Certificate of Compliance, click here

Please visit the Contact Us section for any non-product compliance questions.

Search Parts in this Series
42817Series

Application Tooling | **FAQ**
Tooling specifications and manuals are found by selecting the products below. Crimp Height Specifications are then contained in the Application Tooling Specification document.
Global

Description	Product #
Hand Crimp Tool	0638113800
Mini-Mac™ Applicator	0638912000
Manual Extraction Tool	0638130400