MATERIAL NUMBER	NUMBER OF POSITIONS	PLATING OPTION
44764-0401	04	A
44764-0402	04	B
44764-0403	04	C
44764-0601	06	A
44764-0602	06	B
44764-0603	06	C
44764-0801	08	A
44764-0802	08	B
44764-0803	08	C
44764-1001	10	A
44764-1002	10	B
44764-1003	10	C
44764-1201	12	A
44764-1202	12	B
44764-1203	12	C
44764-1401	14	A
44764-1402	14	B
44764-1403	14	C
44764-1601	16	A
44764-1602	16	B
44764-1603	16	C
44764-1801	18	A
44764-1802	18	B
44764-1803	18	C
44764-2001	20	A
44764-2002	20	B
44764-2003	20	C
44764-2201	22	A
44764-2202	22	B
44764-2203	22	C
44764-2401	24	A
44764-2402	24	B
44764-2403	24	C

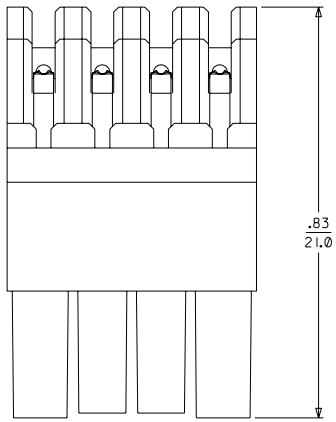

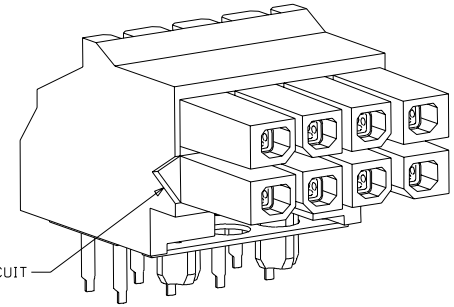

PCB LAYOUT: COMPONENT SIDE
RECOMMEND PCB THICKNESS: .062/(1.57)

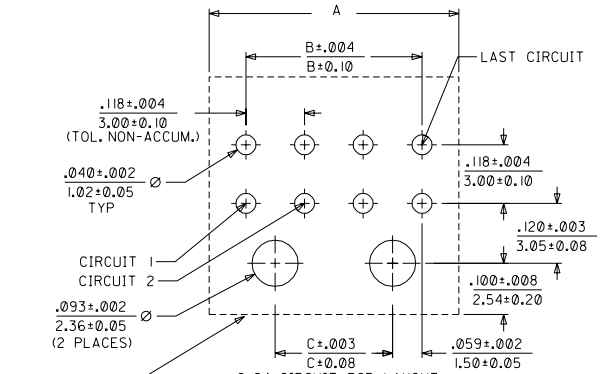

8-24 CIRCUIT PCB LAYOUT

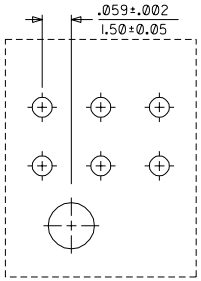

6 CIRCUIT PCB LAYOUT

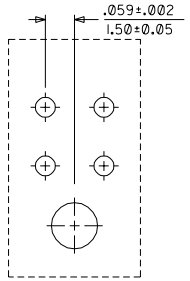

4 CIRCUIT PCB LAYOUT

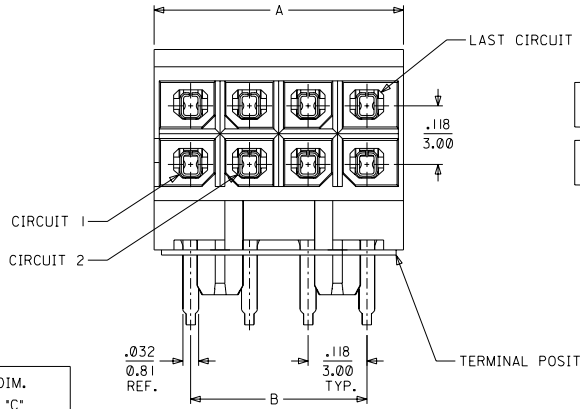

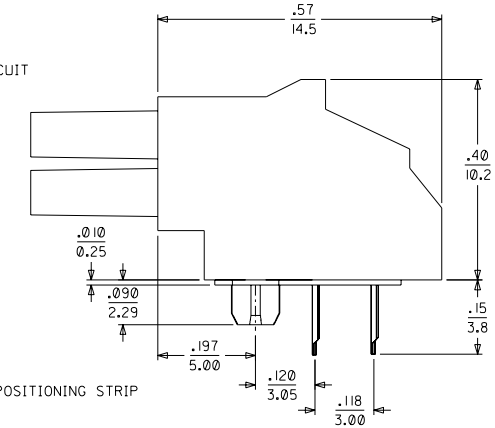

NOTES:
1. MATERIAL:
   HOUSING: HIGH TEMP NYLON, GLASS FILLED, U.L. 94V-0, COLOR BLACK
   TERMINAL: PHOSPHOR BRONZE ALLOY
   POSITIONING STRIP: MYLAR, COLOR NATURAL
2. FINISH:
   (A) = TIN 100 MICROINCHES MIN.
   (B) = SELECTIVE GOLD IN THE CONTACT AREA: 15 MICROINCHES MIN., SELECTIVE TIN-LEAD IN THE PC TAIL AREA: 50 MICROINCHES MIN., WITH NICKEL OVERALL.
   (C) = SELECTIVE GOLD IN THE CONTACT AREA: 30 MICROINCHES MIN., SELECTIVE TIN-LEAD IN THE PC TAIL AREA: 50 MICROINCHES MIN., WITH NICKEL OVERALL.
3. PRODUCT SPECIFICATIONS: PS-44300-001
4. MATES WITH HEADER ASSEMBLY 44428, 44432, AND 44300
5. PACKAGING SPECIFICATION: PER MOLEX DRAWING PK-44764-001

NUMBER OF POSITIONS	DIM. "A"	DIM. "B"	DIM. "C"
24	1.445/(36.70)	1.299/(33.00)	1.181/(30.00)
22	1.327/(33.70)	1.181/(30.00)	1.063/(27.00)
20	1.209/(30.70)	1.063/(27.00)	.945/(24.00)
18	1.091/(27.70)	.945/(24.00)	.827/(21.00)
16	.972/(24.70)	.827/(21.00)	.709/(18.00)
14	.854/(21.70)	.709/(18.00)	.591/(15.00)
12	.736/(18.70)	.591/(15.00)	.472/(12.00)
10	.618/(15.70)	.472/(12.00)	.354/(9.00)
8	.500/(12.70)	.354/(9.00)	.236/(6.00)
6	.382/(9.70)	.236/(6.00)	———
4	.264/(6.70)	.118/(3.00)	———

REV ALLOY
EC NO. UCP2003-1349
DRWN: MUELLER 02/12/09
CH'K: MUELLER 02/12/09
APPR: MARGULIS 02/12/09
DESCRIPTION
C
REV

QUALITY SYMBOLS
MAJOR ▼ = 0
CRITICAL (C) = 0

GENERAL TOLERANCES: (UNLESS SPECIFIED)

	mm	INCH
4 PLACES	±0.	±.
3 PLACES	±0.	±.010
2 PLACES	±0.25	±.014
1 PLACE	±0.35	±.
ANGULAR: ±1/2°		

DRAFT WHERE APPLICABLE MUST REMAIN WITHIN DIMENSIONS

SCALE 4:1
DESIGN UNITS ☒ mm ☐ INCH
THIRD ANGLE PROJECTION
DIMENSIONS: ☐ mm/INCH ☒ INCH/mm ☐ mm ONLY
SHT REV
REVISE ON CAD ONLY

DRAWN BY & DATE: BURLESON 00/07/13
CHECKED BY & DATE: SMUELLER 00/07/13
APPROVED BY & DATE: REDGLEY 00/07/13

TITLE: MICRO-FIT(3.0) BMI
R.A. RECEPTACLE ASSY
4 THRU 24 CIRCUIT

molex MOLEX INCORPORATED

CAD FILENAME: SD-44087*.S01
MATERIAL NO.: SEE CHART
DRAWING NO.: SD-44764-001
SHEET NO.: 1 OF 1

THIS DRAWING CONTAINS INFORMATION THAT IS PROPRIETARY TO MOLEX INCORPORATED AND SHOULD NOT BE USED WITHOUT WRITTEN PERMISSION.

SIZE B