DWG. NO. SD-50034-8*00

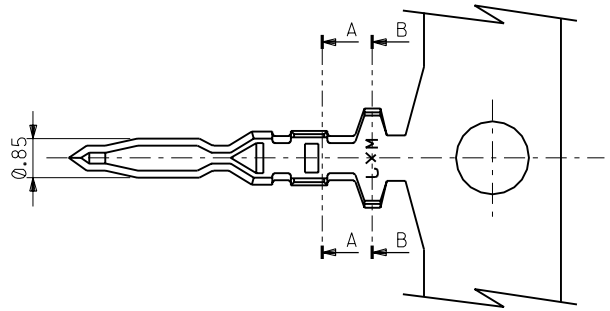

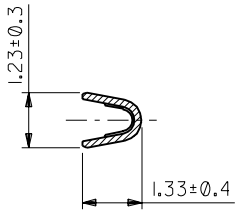

A－A断面
SECT. A-A

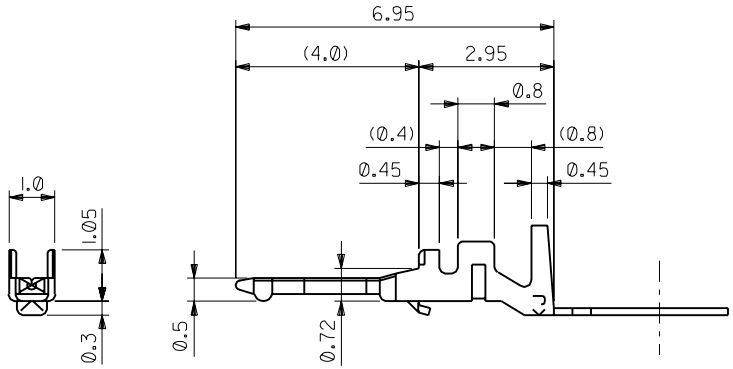

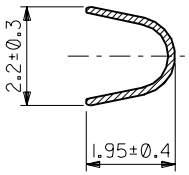

B－B断面
SECT. B-B

注)
NOTE.

1. 適合ハウジング：5101 5-**00
   APPLICABLE HOUSING:5101 5-**00

50034-8100	バラ状 LOOSE
50034-8000	連鎖状 CHAIN
ENG.NO.	形状 FORM

DO NOT SCALE DRAWING

#84NO.	#83NO.	#82NO.	#81NO.
DRWN:	DRWN:	DRWN:	DRWN:
CH'K:	CH'K:	CH'K:	CH'K:
APPR:	APPR:	APPR:	APPR:

#80NO. JC2000-0629
DRWN: K.KOHAMA '00/ 3/28
CH'K: T.YAMAGUCHI '00/ 3/30
APPR: M.FUKUSHIMA '00/ 3/30
REDRAWN

REV

DESCRIPTION

MATERIAL 材料: 錫めっき済 りん青銅 PHOS. BRO. TIN-PLATED

FINISH 仕上げ: ——//——

WIRE RANGE 適用電線範囲: AWG #26-#30

INS. RANGE 被覆外径: Ø1.4 MAX.

GENERAL TOLERANCES: (UNLESS SPECIFIED) 一般公差

10 UNDER 未満		±0.2
10 OVER 以上	30 UNDER 未満	±0.25
30 OVER 以上		±0.3
ANGLE 角度		±3°

SCALE 10:1

DESIGN UNITS ☒mm ☐INCH

THIRD ANGLE PROJECTION

DIMENSIONS: ☐ mm/INCH ☐ INCH/mm ☒ mm ONLY

REVISE ON CAD ONLY

DRAWN BY & DATE K.KOHAMA '00/ 3/28

CHECKED BY & DATE T.YAMAGUCHI '00/ 3/30

APPROVED BY & DATE M.FUKUSHIMA '00/ 3/30

CAD FILENAME S50034.S01

TITLE:
2.0 BOARD
IN CONN. CRIMP PIN

molex MOLEX INCORPORATED

MATERIAL NO. 50034-8*00

DRAWING NO. SD-50034-8*00

SHEET NO. 1

SIZE B

THIS DRAWING CONTAINS INFORMATION THAT IS PROPRIETARY TO MOLEX INCORPORATED AND SHOULD NOT BE USED WITHOUT WRITTEN PERMISSION.

S50034.S01

EN-02J(097) MXJ-54