GENERAL TOLERANCE										USED ON
10 MAX	30 MAX	50 MAX	70 MAX	100 MAX	120 MAX	250 MAX	250 OVER	ANGLE	ECCENT	
±0.15	±0.20	±0.30	±0.40	±0.50	±0.75	±0.90	±1.4	±0.5°	0.1	

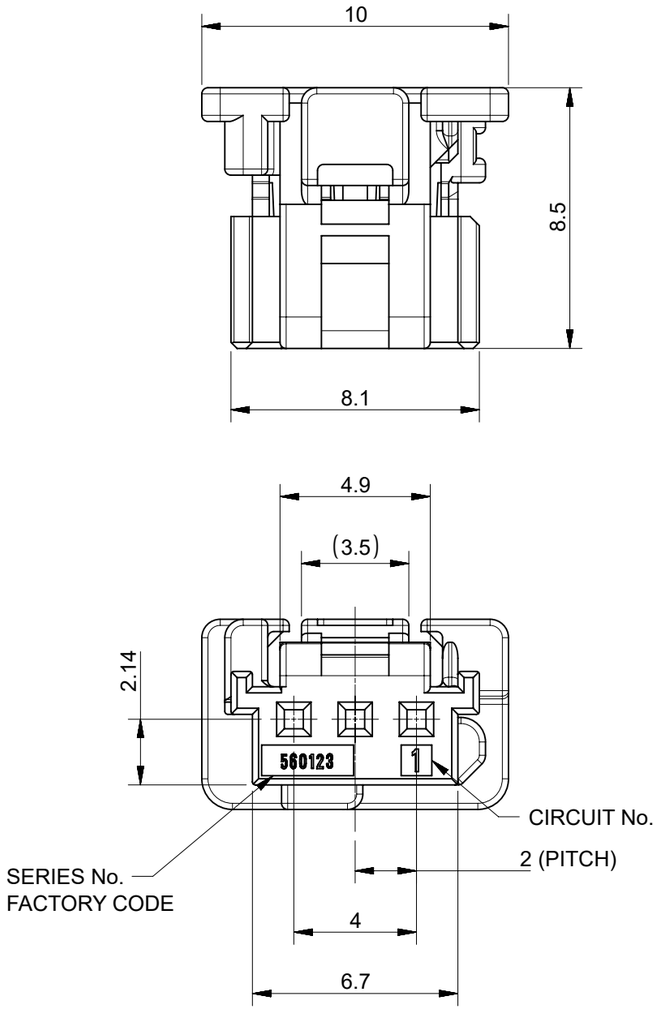

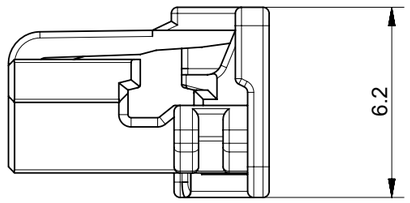

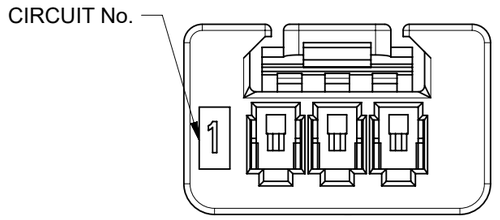

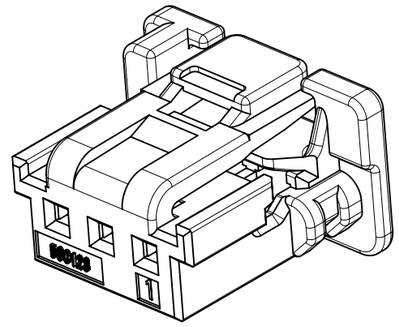

ISO VIEW

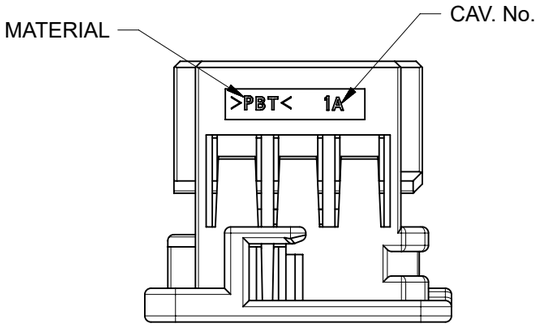

NOTES:
1. MATERIALS : POLYESTER (PBT), GLASS UNFILLED, UL 94V-0
2. MATE WITH : 502352, 560020 SERIES
3. APPLICABLE TERMINAL : 560124 SERIES
4. APPLICABLE ISL : 560125 SERIES
5. GENERAL TOLERANCE : SEE TABLE
6. EVL AND RoHS COMPLIANT
7. PRODUCT SPECIFICATION : PS-560123-001,002,003
8. PACKING SPECIFICATION : PK-560123-001

ORDER NO.	MATERIAL NO.	COLOR
560123-0300	5601230300	WHITE
560123-0301	5601230301	BLACK
560123-0302	5601230302	RED
560123-0304	5601230304	BLUE

SYMBOLS: F/A = 0; F/C = 0; F/B = 0; S = 0; ▼ = 0; C = 0; ☒ = 0; ■ = 0; ▽ = 0

THIS DRAWING CONTAINS INFORMATION THAT IS PROPRIETARY TO MOLEX ELECTRONIC TECHNOLOGIES, LLC AND SHOULD NOT BE USED WITHOUT WRITTEN PERMISSION

DIMENSION UNITS	SCALE
mm	5:1

GENERAL TOLERANCES (UNLESS SPECIFIED)

ANGULAR TOL	± °
4 PLACES	±
3 PLACES	±
2 PLACES	±
1 PLACE	±
0 PLACES	±

DRAFT WHERE APPLICABLE MUST REMAIN WITHIN DIMENSIONS

CURRENT REV DESC:

EC NO: 629104
DRWN: SAKIM 2019/12/11
CHK'D: YKJUNG 2019/12/13
APPR: YKJUNG 2019/12/13

INITIAL REVISION:
DRWN: YIBAEK 2014/07/08
APPR: SRTAK 2014/08/26

THIRD ANGLE PROJECTION | DRAWING: A3-SIZE | SERIES: 560123

molex

NEW 2.0 PITCH W/B CONN.
REC. 3WAY HSG DURACLIK ISL SERIES

PRODUCT CUSTOMER DRAWING

DOCUMENT NUMBER	DOC TYPE	DOC PART	REVISION
SD-560123-003	PSD	001	C1

MATERIAL NUMBER	CUSTOMER	SHEET NUMBER
	GENERAL MARKET	1 OF 1

DOCUMENT STATUS	P1	RELEASE DATE	2019/12/13 04:33:53

FORMAT: master_tb-mod-A3
REVISION: H
DATE: 2018/01/18